Round cylinders CRDSNU

Key features

At a glance

The stainless steel round cylinder CRDSNU in a clean design is the perfect choice for the most demanding environmental conditions.

- Corrosion resistant against aggressive ambient conditions
- Easy-to-clean design
- Long service life thanks to optional dry-running seal
- Wide range of variants for customised applications
- Self-adjusting pneumatic end-position cushioning saves time during commissioning and adapts optimally to load and speed changes
- Suitable for direct contact with food according to European Regulation (EC) No. 1935/2004. More information → www.festo.com/certificates/CRDSNU_PUB
- FDA-compliant seal and NSF-H1 lubrication

Applications

Reliable components need to be fully functional and operational, even in harsh operating conditions. The aim is to maximise availability of machinery while minimising downtimes. Stainless-steel cylinders are therefore used in applications where the surface finish of normal pneumatic drives would not be able to withstand the surrounding media. However, designing a corrosion-resistant system involves more than simply selecting a suitable steel; it also requires the selection of a matching concept for mounting components and accessories.

Application example:
The atmosphere in the maturing cellar of a cheese factory consists of an unpleasant mix of ammonia, lactic acid and 98% humidity.

Strengths

The stainless-steel cylinders from Festo are characterised by resistant materials, such as 1.4301 and 1.4401. These popular high-alloy, stainless austenitic chrome-nickel and chrome-nickel-molybdenum steels protect against chemical or electrochemical stress as well as damage to the surface materials caused by cleaning agents or disinfectants. These groups of materials are particularly resistant to uniform surface corrosion and offer increased protection against pitting and crevice corrosion.

The benefits to you

The Festo worldwide service network ensures optimum availability of stainless-steel cylinders. As well as a comprehensive range of standards-based cylinders to DIN ISO 15552 and 6432, we also offer a range of matching mounting components and accessories. The stainless-steel cylinders are assembled with grease that is compliant with NSF-H1 and wipers in accordance with BGVV (Federal Institute for Risk Assessment) guidelines. This means that they are suitable for use in the food zone. We will be pleased to provide you with further information about future additions to our stainless-steel range. Just get in touch with us.

Good to know

For applications in harsh environments, you can rely on our years of experience in stainless steel. Our experts will answer any questions you might have about surface finishes and chemical resistance.

Key features

Resistance

Complete resistance to pitting and crevice corrosion is not always possible, even with ideal application parameters. The following parameters increase the pitting effect of chloride ions:

- Concentration of chloride ions
- Duration of contact
- Temperature
- Decreasing pH value

It must therefore be ensured during design, assembly and operation that all parts of the machinery can be properly cleaned to avoid an accumulation of chloride ions.

Selected sealing materials ensure very high resistance to a wide range of chemical compounds.
More information on media resistance can be obtained on the Internet at www.festo.com.

In principle, we recommend that the cylinder be cleaned with the piston rod in the retracted position to avoid the risk of washing out the lifetime lubrication.

Various types of contamination of machines make cleaning processes necessary in many industry sectors. The degree of cleaning required ranges from wiping the machinery with a dry cloth to wet cleaning to foam cleaning with different exposure times and concentrations.

It is therefore impossible to make a general recommendation on compatibility.

Wet cleaning

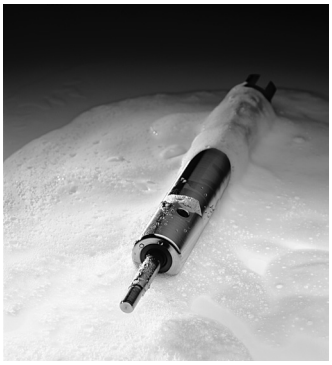

Foam cleaning

Key features

Variants			
CRDSNU Basic version	CRDSNU-S2: Through piston rod	CRDSNU-MQ: Short end cap without swivel mounting	CRDSNU-MG/CRDSNU-B-MG: Bearing cap without mounting thread
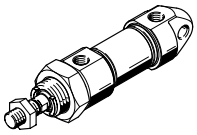	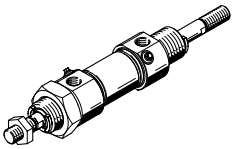	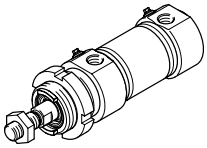	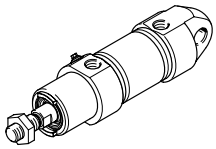

Further variants

Symbol	Key features		Description
	S2	Through piston rod	For working at both ends with the same force in the forward and return stroke, for attaching external stops
	S6	Heat-resistant seals	Temperature resistance up to max. 120 °C
	K2	Extended male piston rod thread	–
	K3	Female piston rod thread	–
	K5	Special piston rod thread	Metric standard thread to ISO
	K8	Extended piston rod	–
	A1	Wiper variant	Increased chemical resistance: Wiper made from fluoro rubber
	A2	Wiper variant	Hard wiper: Cylinder with hard scraper for dust, particles and viscous media
	A3	Wiper variant	Unlubricated operation: Cleaning processes degrease the piston rod. A special piston rod seal permits a longer service life compared to the standard seal.
	TT	Low temperature	Temperature resistance down to max. –40 °C

Key features

Cushioning types			
	Cushioning P	Cushioning PPS	Cushioning PPV
Operating mode	• The drive is fitted with polymer elastic end-position cushioning	• The drive is fitted with self-adjusting end-position cushioning	• The drive is fitted with adjustable end-position cushioning
Application	• Small loads • Low speeds • Low impact energies	• Small to medium loads • Low to medium speeds • Medium impact energies	• Medium to large loads • High speeds • High impact energies
Advantages	• No adjustment required • Saves time	• No adjustment required • Saves time • Powerful	• Very powerful

Peripherals overview

CRDSNU-12 ... 25-...

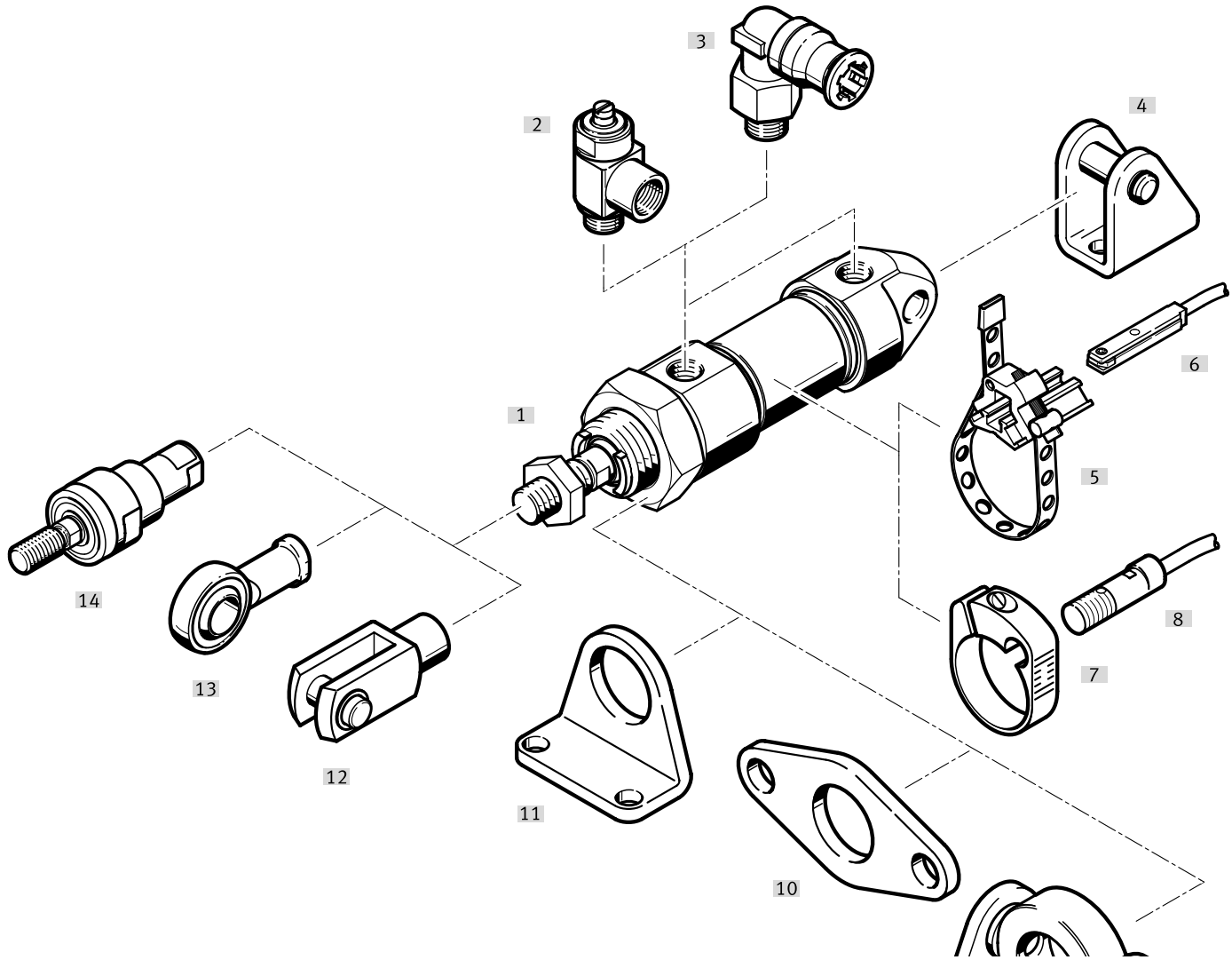

Peripherals overview

Mounting attachments and accessories		Description	CRDSNU-			CRDSNU-B	→ Page/Internet
			Basic version	MQ	MG	MG	
[1]	Standards-based cylinder CRDSNU-12 ... 25-...						
[2]	One-way flow control valve CRGRLA	For regulating speed	■	■	■	■	43
[3]	Push-in fitting CRQS	For connecting tubing with standard O.D.	■	■	■	■	qs
[4]	Clevis foot CRLBN	For end caps	■	–	■	■	40
[5]	Mounting kit DASP-C1	For proximity switch CRSMT-8M	■	■	■	■	43
[6]	Mounting kit SMBR-...-S6	For proximity switch CRSMT-8M	■	■	■	■	43
[7]	Proximity switch CRSMT-8M	• Design for T-slot • For position sensing	■	■	■	■	42
[8]	Swivel mounting CRSBN	For bearing caps	■	■	–	–	38
[9]	Flange mounting CRFBN	For bearing caps	■	■	–	–	39
[10]	Foot mounting CRHBN	For bearing caps	■	■	–	–	38
[11]	Rod clevis CRSG	Permits a swivelling movement of the cylinder in one plane	■	■	■	■	41
[12]	Rod eye CRSGS	With spherical bearing	■	■	■	■	41
[13]	Self-aligning rod coupler CRFK	To compensate for radial and angular deviations	■	■	■	■	41

Peripherals overview

CRDSNU-12 ... 25-...-S2 – Through piston rod

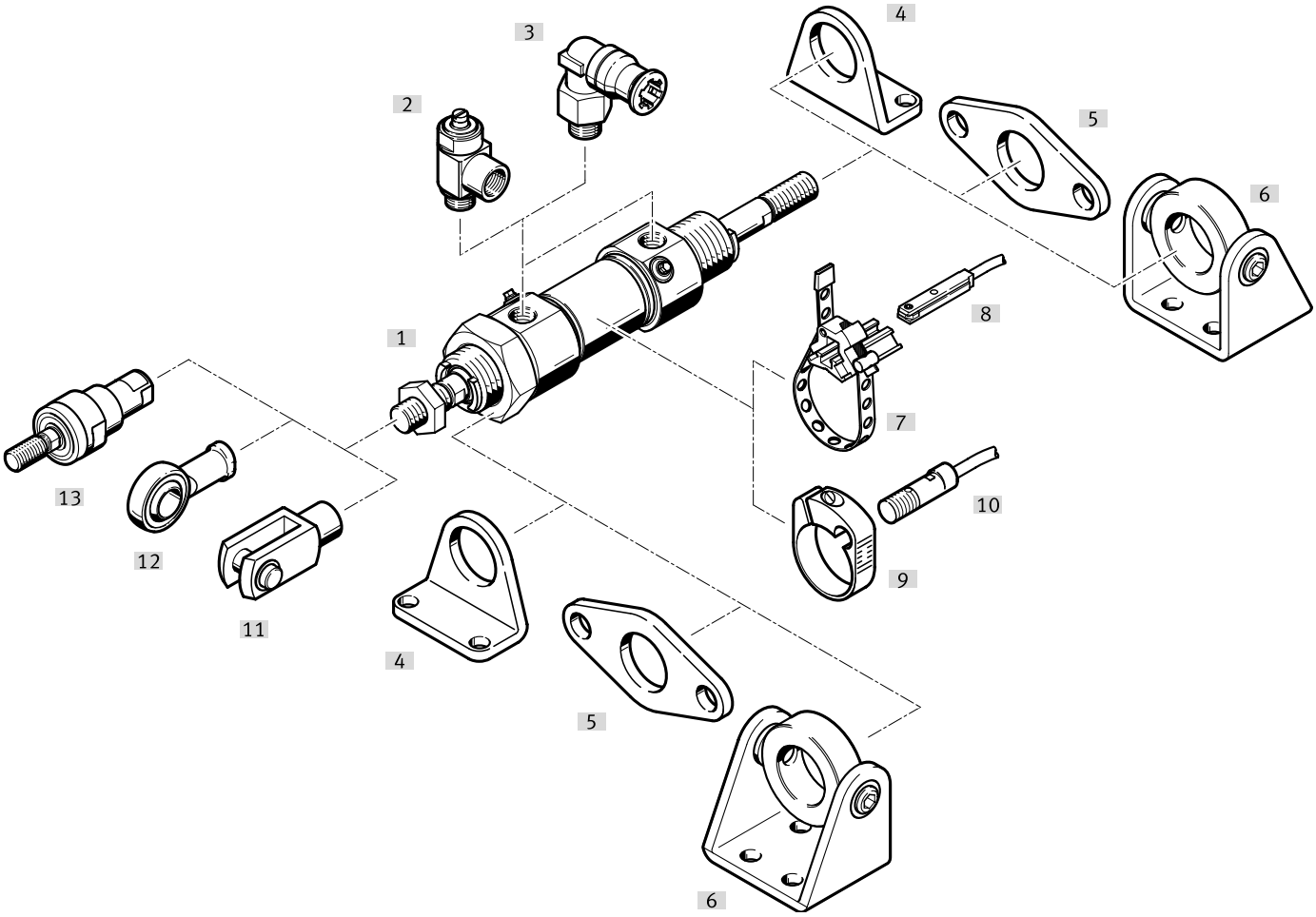

Peripherals overview

Mounting attachments and accessories		Description	→ Page/Internet
[1]	Standards-based cylinder with through piston rod CRDSNU-12 ... 25-...-S2		
[2]	One-way flow control valve CRGRLA	For regulating speed	43
[3]	Push-in fitting CRQS	For connecting tubing with standard O.D.	qs
[4]	Foot mounting CRHBN	For bearing and end caps	38
[5]	Flange mounting CRFBN	For bearing and end caps	39
[6]	Swivel mounting CRSBN	For bearing and end caps	38
[7]	Mounting kit DASP-C1	For proximity switch CRSMT-8M	43
[8]	Mounting kit SMBR-...-S6	For proximity switch CRSMT-8M	43
[9]	Proximity switch CRSMT-8M	• Design for T-slot • For position sensing	42
[10]	Rod clevis CRSG	Permits a swivelling movement of the cylinder in one plane	41
[11]	Rod eye CRSGS	With spherical bearing	41
[12]	Self-aligning rod coupler CRFK	To compensate for radial and angular deviations	41

Type codes

001	Series	
CRDSNU	Round cylinder, double-acting, stainless steel	

002	Piston diameter [mm]	
12	12	
16	16	
20	20	
25	25	

003	Stroke range [mm]	
...	1 ... 500	

004	Cushioning	
P	Elastic cushioning rings/plates on both sides	
PPS	Pneumatic cushioning, self-adjusting at both ends	
PPV	Pneumatic cushioning, adjustable at both ends	

005	Position sensing	
A	For proximity sensor	

006	Cylinder end cap	
	Standard	
MQ	Short end cap without swivel mounting	
MG	Bearing cap without mounting thread	

007	Scraper variant	
	None	
A1	Increased chemical resistance	
A2	Hard scraper	
A3	For unlubricated operation	

008	Piston rod type	
	At one end	
S2	Through piston rod	

009	Piston rod thread type	
	Male thread	
K3	Female thread	

010	Custom thread	
“M10”K5	M10	

011	Piston rod extension	
	None	
...K8	1 ... 500 mm	

012	Temperature resistance	
	Standard	
S6	Heat-resistant seals max. 120 °C	

013	Temperature range	
	Standard	
TT	-40 ... +80°C	

014	EU certification	
	None	
EX4	II 2GD	

Datasheet

P cushioning

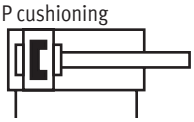

Diameter
12 ... 25 mm

Stroke length
1 ... 500 mm
Longer strokes on request

Spare parts service

General technical data						
Piston ⌀			12	16	20	25
Pneumatic connection			M5	M5	G1/8	G1/8
Piston rod thread			M6	M6	M8	M10x1.25
Design			Piston			
			Piston rod			
			Cylinder barrel			
Cushioning	P		Elastic cushioning rings/plates at both ends			
	PPV		–		Cushioning, adjustable at both ends	
	PPS		–	Cushioning, self-adjusting at both ends		
Cushioning length	PPV	[mm]	–		15	17
	PPS	[mm]	–	12	15	17
Position sensing			Via proximity switch			
Type of mounting			With accessories			
			With male thread			
Mounting position			Any			

Operating conditions		
Operating medium		Compressed air to ISO 8573-1:2010 [7:4:4]
Note on the operating/ pilot medium		Lubricated operation possible (in which case lubricated operation will always be required)
Operating pressure[1]	[MPa]	0.1 ... 1
	[bar]	1 ... 10
	[psi]	14.5 ... 145

1) An increase in the minimum operating pressure is possible with variants

Environmental conditions					
Standards-based cylinder		Basic type/A3	A1	TT	S6
Ambient temperature1)	[°C]	–20 ... +80	0 ... +80	–40 ... +80	0 ... +120
Corrosion resistance class CRC2)		3 - High corrosion stress			

1) Note operating range of proximity switches
2) More information www.festo.com/x/topic/crc

Datasheet

ATEX[1]	
ATEX category for gas	II 2G
Type of ignition protection for gas	Ex h IIC T4 Gb
ATEX category for dust	II 2D
Type of (ignition) protection for dust	Ex h IIIC T120°C Db
Explosion-proof ambient temperature	–20 °C <= Ta <= +60 °C
CE marking (see declaration of conformity)	To EU Explosion Protection Directive (ATEX)
Explosion protection certification outside the EU	EPL Gb (GB)
	EPL Db (GB)

1) Note the ATEX certification of the accessories.

Forces [N] and impact energy [J]				
Piston ⌀	12	16	20	25
Theoretical force at 0.6 MPa (6 bar, 87 psi), advancing	68	121	188	295
Theoretical force at 0.6 MPa (6 bar, 87 psi), retracting	51	104	158	247
Impact energy in the end positions for P cushioning1)	0.07	0.15	0.20	0.30

1) The values are reduced by approx. 50% at an ambient temperature of 80 °C

Weight [g]				
Piston ⌀	12	16	20	25
Basic weight with 0 mm stroke	101	130	310	410
Additional weight per 10 mm stroke	4	5	7	11
Moving mass with 0 mm stroke	19	21	42	73
Additional mass per 10 mm stroke	2	2	4	6

Datasheet

Max. transverse force Fq as a function of projection l

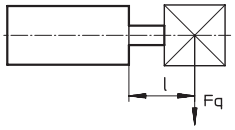

Basic version

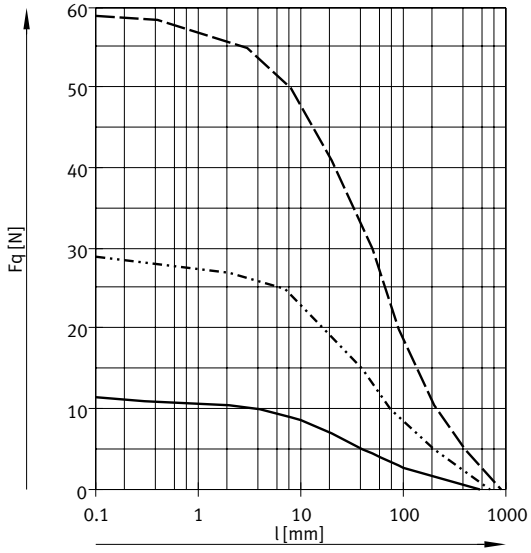

S2 – Through piston rod

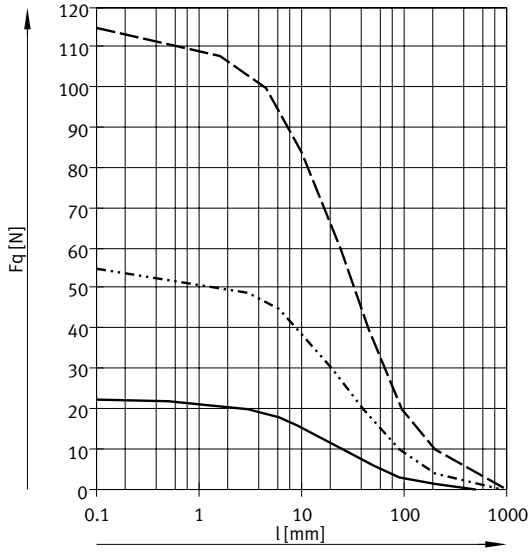

CRDSNU-12/16
CRDSNU-20
CRDSNU-25

Materials

Sectional view

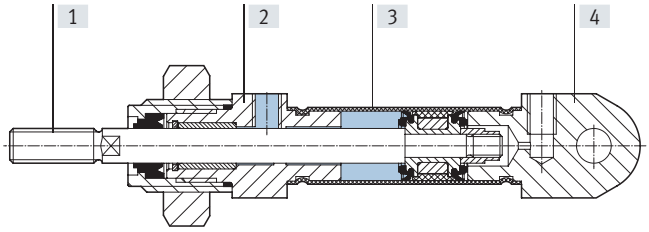

Standards-based cylinder		Basic version	A1	A3	TT	S6
[1]	Piston rod	High-alloy stainless steel				
[2]	Bearing cap	High-alloy stainless steel				
[3]	Cylinder barrel	High-alloy stainless steel				
[4]	End cap	High-alloy stainless steel				
–	Seals	TPE-U (PUR) media seal (modified for resistance to hydrolysis and cleaning)	FPM	UHMW-PE	TPE-U (PUR) (suitable for low temperatures)	FPM
	Note on materials	RoHs-compliant				
	Cleanroom class	Class 5 to ISO 14644-1				
	LABS (PWIS) conformity	VDMA 24364-B2-L		VDMA 24364-Zone III	VDMA 24364-B2-L	
	Food-safe	See declaration of conformity1)				

1) For information about the area of use, see the EC declaration of conformity at: www.festo.com/Certificates/CRDSNU_PUB

Datasheet

Dimensions Download CAD data ➔ www.festo.com

Basic version

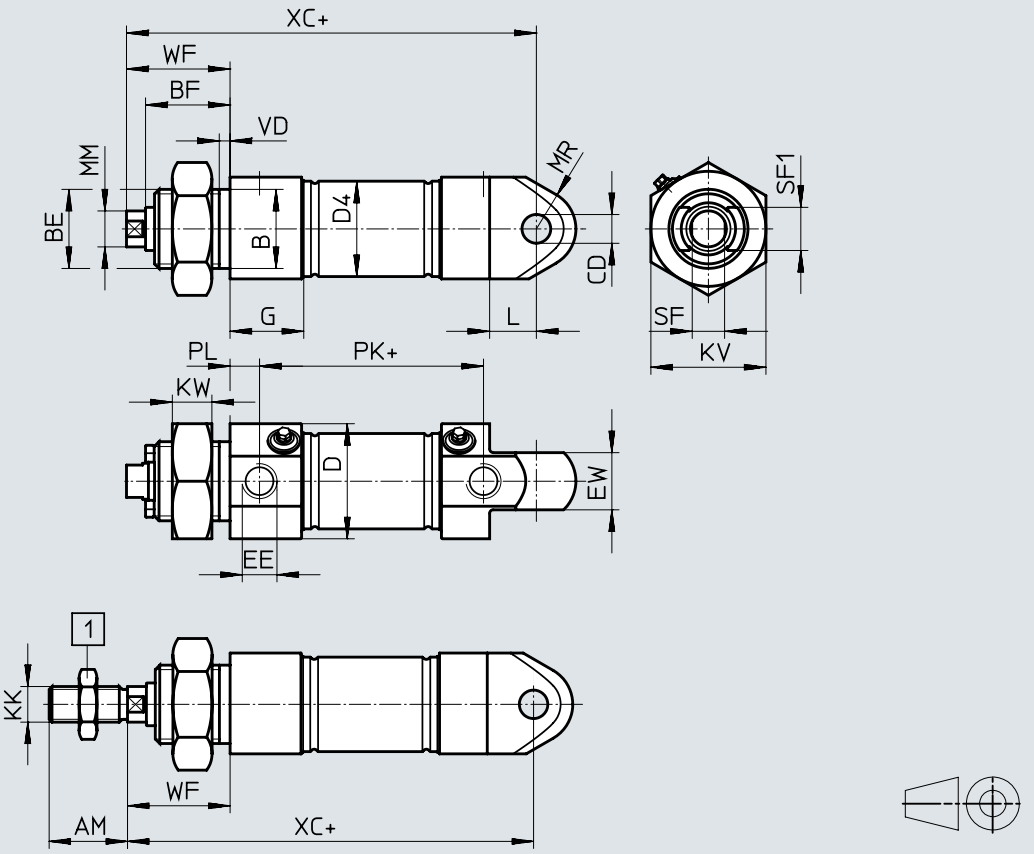

Note

[1] Piston rod nut is not included in the scope of delivery for diameter 8 ... 20.

\+ = plus stroke length

ø [mm]	AM	B ø h9	BE	BF	CD ø H8	D ø	D4 ø
12	16	16	M16x1.5	18	6	20	13.3
16	16	16	M16x1.5	18	6	20	17.3
20	20	22	M22x1.5	20.7	8	30	21.3
25	22	22	M22x1.5	23.5	8	32	26.5

ø [mm]	EE	EW	G	KK	KV	KW	L	MM ø
12	M5	12	9.5	M6	24	8	10	6
16	M5	12	9.7	M6	24	8	10	6
20	G1/8	16	20.5	M8	32	11	13	8
25	G1/8	16	20.5	M10x1.25	32	11	13	10

ø [mm]	MR	PL	ST	SF1	VD	WF	XC ±1
12	8	6	5	9	3.5	22	75
16	8	6	5	9	3.5	22	82
20	11	8.2	7	12	3.5	24	95
25	11	8.2	9	12	3.5	28	104

Datasheet

Dimensions Download CAD data ➔ www.festo.com

MQ – Short end cap without swivel mounting

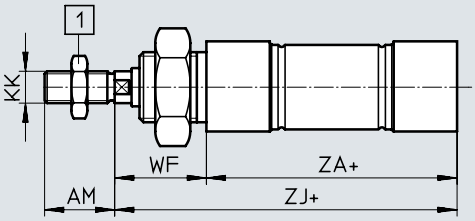

MG – Bearing cap without mounting thread

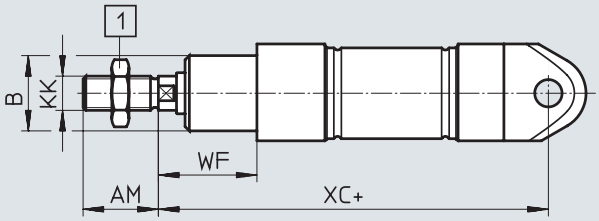

MQ-K3 – Short end cap without swivel mounting, with female piston rod thread

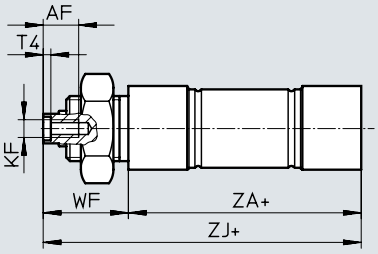

MG-K3 – Bearing cap without mounting thread, with female piston rod thread

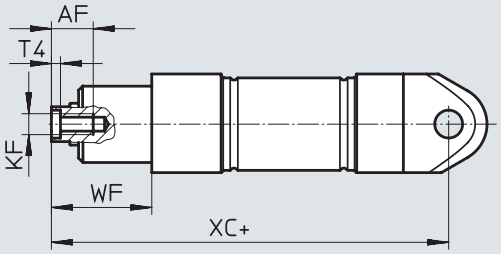

S2 – Through piston rod

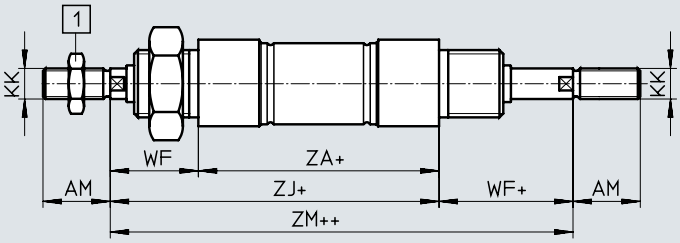

S2-K3 – Through piston rod, with female thread

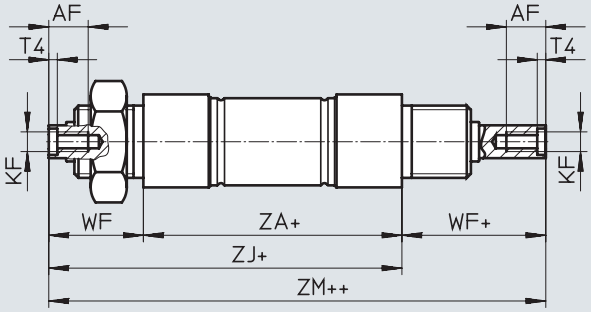

Note

[1] Piston rod nut is not included in the scope of delivery for diameter 8 ... 20.

+ = plus stroke length

++ = plus 2x stroke length

ø [mm]	AF	AM	B ø h9	KF	KK
12	–	16	16	–	M6
16	–	16	16	–	M6
20	12	20	22	M4	M8
25	12	22	22	M6	M10x1.25

ø [mm]	T4	WF	XC ±1	ZA	ZJ	ZM
12	–	22	75	50	72	95
16	–	22	82	56	78	101
20	2	24	95	68	92	117
25	2.6	28	104	69.5	97.5	126

Datasheet

Dimensions Download CAD data ➔ www.festo.com

K2 – Extended male piston rod thread

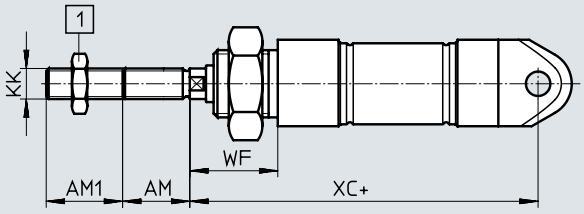

K3 – Female piston rod thread

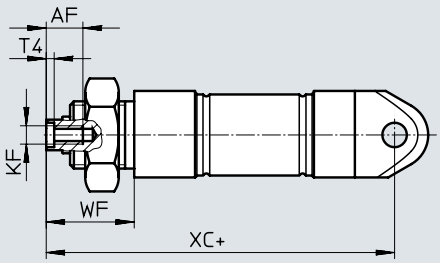

K5 – Special piston rod thread

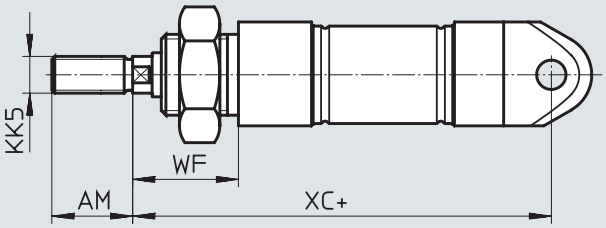

K8 – Extended piston rod

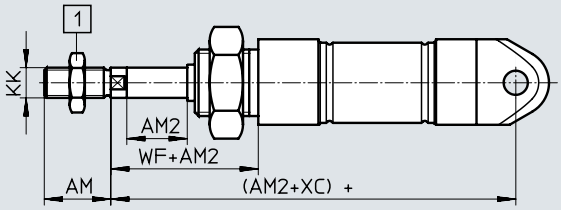

K3-K8 – Extended piston rod, with female thread

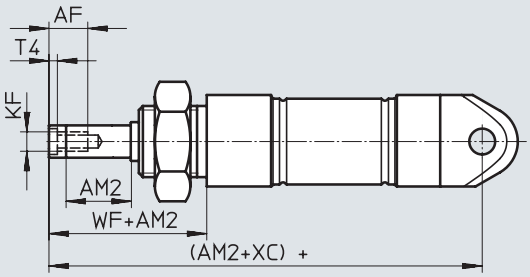

TT – Low temperature / A2 – Hard wiper

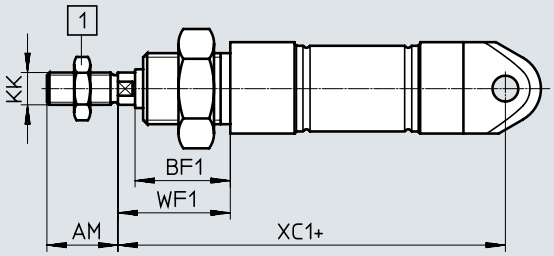

Note

[1] Piston rod nut is not included in the scope of delivery for diameter 8 ... 20.

\+ = plus stroke length

Datasheet

ø [mm]	AF	AM	AM1 max.	AM2 max.
12	–	16	1 ... 20	1 ... 100
16	–	16	1 ... 20	1 ... 100
20	12	20	1 ... 25	1 ... 100
25	12	22	1 ... 35	1 ... 100

ø [mm]	BF1	KF	KK	KK5
12	24	–	M6	–
16	24	–	M6	–
20	26.7	M4	M8	–
25	29.5	M6	M10x1.25	M10

ø [mm]	T4	WF	WF1	XC ±1	XC1 ±1
12	–	22	28	75	81
16	–	22	28	82	88
20	2	24	30	95	101
25	2.6	28	34	104	110

Ordering data

Ordering data

P – Elastic cushioning rings/plates
A – With position sensing

Type	Piston ø [mm]	Stroke [mm]	Part no.	Type
	12	10	**8152524**	**CRDSNU-12-10-P-A**
		25	**8152525**	**CRDSNU-12-25-P-A**
		40	**8152526**	**CRDSNU-12-40-P-A**
		50	**8152527**	**CRDSNU-12-50-P-A**
		80	**8152528**	**CRDSNU-12-80-P-A**
		100	**8152529**	**CRDSNU-12-100-P-A**
	16	10	**8152548**	**CRDSNU-16-10-P-A**
		15	**8152549**	**CRDSNU-16-15-P-A**
		20	**8152550**	**CRDSNU-16-20-P-A**
		25	**8152551**	**CRDSNU-16-25-P-A**
		40	**8152552**	**CRDSNU-16-40-P-A**
		50	**8152553**	**CRDSNU-16-50-P-A**
		80	**8152554**	**CRDSNU-16-80-P-A**
		100	**8152555**	**CRDSNU-16-100-P-A**
	20	10	**8152557**	**CRDSNU-20-10-P-A**
		15	**8152558**	**CRDSNU-20-15-P-A**
		20	**8152559**	**CRDSNU-20-20-P-A**
		25	**8152560**	**CRDSNU-20-25-P-A**
		40	**8152561**	**CRDSNU-20-40-P-A**
		50	**8152562**	**CRDSNU-20-50-P-A**
		80	**8152563**	**CRDSNU-20-80-P-A**
		100	**8152564**	**CRDSNU-20-100-P-A**
	25	10	**8152627**	**CRDSNU-25-10-P-A**
		15	**8152628**	**CRDSNU-25-15-P-A**
		20	**8152629**	**CRDSNU-25-20-P-A**
		25	**8152630**	**CRDSNU-25-25-P-A**
		40	**8152631**	**CRDSNU-25-40-P-A**
		50	**8152632**	**CRDSNU-25-50-P-A**
		80	**8152633**	**CRDSNU-25-80-P-A**
		100	**8152634**	**CRDSNU-25-100-P-A**

Ordering data

Ordering data – Parts in stock

Type	Piston ⌀ [mm]	Stroke [mm]	Part no.	Type
	16	10	**8073759**	**CRDSNU-B-16-10-P-A-MG-A1**
		25	**8073760**	**CRDSNU-B-16-25-P-A-MG-A1**
		40	**8073761**	**CRDSNU-B-16-40-P-A-MG-A1**
		50	**8073762**	**CRDSNU-B-16-50-P-A-MG-A1**
		80	**8073763**	**CRDSNU-B-16-80-P-A-MG-A1**
		100	**8073764**	**CRDSNU-B-16-100-P-A-MG-A1**
		125	**8073765**	**CRDSNU-B-16-125-P-A-MG-A1**
		160	**8073766**	**CRDSNU-B-16-160-P-A-MG-A1**
		200	**8073767**	**CRDSNU-B-16-200-P-A-MG-A1**
	20	10	**8073980**	**CRDSNU-B-20-10-PPS-A-MG-A1**
		25	**8073979**	**CRDSNU-B-20-25-PPS-A-MG-A1**
		40	**8073978**	**CRDSNU-B-20-40-PPS-A-MG-A1**
		50	**8073977**	**CRDSNU-B-20-50-PPS-A-MG-A1**
		80	**8073976**	**CRDSNU-B-20-80-PPS-A-MG-A1**
		100	**8073975**	**CRDSNU-B-20-100-PPS-A-MG-A1**
		125	**8073974**	**CRDSNU-B-20-125-PPS-A-MG-A1**
		160	**8073973**	**CRDSNU-B-20-160-PPS-A-MG-A1**
		200	**8073972**	**CRDSNU-B-20-200-PPS-A-MG-A1**
	25	10	**2159636**	**CRDSNU-B-25-10-PPS-A-MG-A1**
		25	**2159637**	**CRDSNU-B-25-25-PPS-A-MG-A1**
		40	**2159638**	**CRDSNU-B-25-40-PPS-A-MG-A1**
		50	**2159639**	**CRDSNU-B-25-50-PPS-A-MG-A1**
		80	**2159640**	**CRDSNU-B-25-80-PPS-A-MG-A1**
		100	**2159641**	**CRDSNU-B-25-100-PPS-A-MG-A1**
		125	**2159642**	**CRDSNU-B-25-125-PPS-A-MG-A1**
		160	**2159643**	**CRDSNU-B-25-160-PPS-A-MG-A1**
		200	**2159644**	**CRDSNU-B-25-200-PPS-A-MG-A1**

P – Elastic cushioning rings/plates
PPS – Pneumatic cushioning, self-adjusting at both ends
A – With position sensing
MG – Bearing cap without mounting thread
A1 – Wiper variant: increased chemical resistance

Note

The bearing cap on stocked parts is made of one piece.
When ordered using the modular product system, the bearing cap is made of two pieces, which makes it possible to exchange the wiper in the event of a repair.

Ordering data

Ordering table – Modular product system

Size		12	16	20	25	Conditions	Code		Enter code
Module no.		**552787**	**552788**	**552789**	**552790**				
Version		Stainless steel					**CR**		CR
Function		Standards-based cylinder, double-acting, to ISO 6432					**DSNU**		DSNU
Piston ⌀	[mm]	12	16	20	25		**-...**		
Stroke	[mm]	1 ... 200		1 ... 320	1 ... 500	[1]	**-...**		
Cushioning		Elastic cushioning rings/plates at both ends				[10]	**-P**		
		–	Pneumatic cushioning, self-adjusting			[2] [8]	**-PPS**		
		–	–	Pneumatic cushioning, adjustable at both ends			**-PPV**		
Position sensing		Via proximity switch					**-A**		-A
Cylinder end cap		Short end cap without swivel mounting					**-MQ**		
		Bearing cap without mounting thread					**-MG**		
Wiper variant		Increased chemical resistance				[2]	**-A1**		
		Hard wiper				[2] [3] [9]	**-A2**		
		Unlubricated operation				[2]	**-A3**		
Piston rod type		Through piston rod				[3] [4]	**-S2**		
Extended male thread		Extended male piston rod thread							
	[mm]	1 ... 20		1 ... 25	1 ... 35		**-...K2**		
Female thread		Piston rod with female thread							
		–	–	(M4)	(M6)	[5]	**-K3**		
Special thread		Special piston rod thread							
		–	–	–	M10		**-"..."K5**		
Extended piston rod	[mm]	1 ... 100					**-...K8**		
Temperature resistance		Heat-resistant seals max. +120 °C					**-S6**		
Low temperature		–	Seals and lubricating grease from –40 °C ... +80 °C			[3] [6] [9]	**-TT**		
EU certification (ATEX)		II 2GD				[7]	**-EX4**		

[1]	-...	Longer strokes on request
[2]	PPS, A1, A2, A3	Not with S6, TT
[3]	A2, S2, TT	Not with MG
[4]	S2	Not with MQ
[5]	K3	Not with K2, K5
[6]	TT	Not with S6
[7]	EX4	Not with S6, TT
[8]	PPS	Not with MQ for piston diameter 16
[9]	A2, TT	Not with S2, K3
[10]	P	Not with B except for piston diameter 16

Key features

Variants			
CRDSNU Basic version	CRDSNU-S2: Through piston rod	CRDSNU-MQ: Short end cap without swivel mounting	CRDSNU-MG: Bearing cap without mounting thread
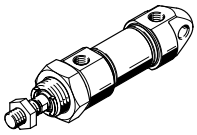	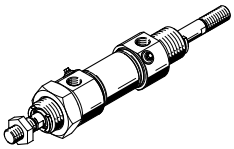	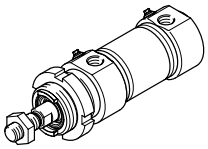	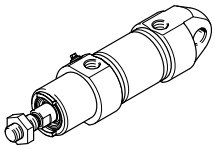

Further variants

Symbol	Key features		Description
	S2	Through piston rod	For working at both ends with the same force in the forward and return stroke, for attaching external stops
	S6	Heat-resistant seals	Temperature resistance up to max. 120 °C
	K2	Extended male piston rod thread	–
	K3	Female piston rod thread	–
	K5	Special piston rod thread	Metric standard thread to ISO
	K8	Extended piston rod	–
	A1	Wiper variant	Increased chemical resistance
	A2	Wiper variant	Hard wiper: Cylinder with hard wiper
	A3	Wiper variant	Unlubricated operation: Cleaning processes degrease the piston rod. A special piston rod seal permits a longer service life compared to the standard seal.
	TT	Low temperature	Temperature resistance down to max. –40 °C

Cushioning types			
	Cushioning P	Cushioning PPS	Cushioning PPV
Operating mode	• The drive is fitted with polymer elastic end-position cushioning	• The drive is fitted with self-adjusting end-position cushioning	• The drive is fitted with adjustable end-position cushioning
Application	• Small loads • Low speeds • Low impact energies	• Small to medium loads • Low to medium speeds • Medium impact energies	• Medium to large loads • High speeds • High impact energies
Advantages	• No adjustment required • Saves time	• No adjustment required • Saves time • Powerful	• Very powerful

Peripherals overview

CRDSNU-32 ... 100-...

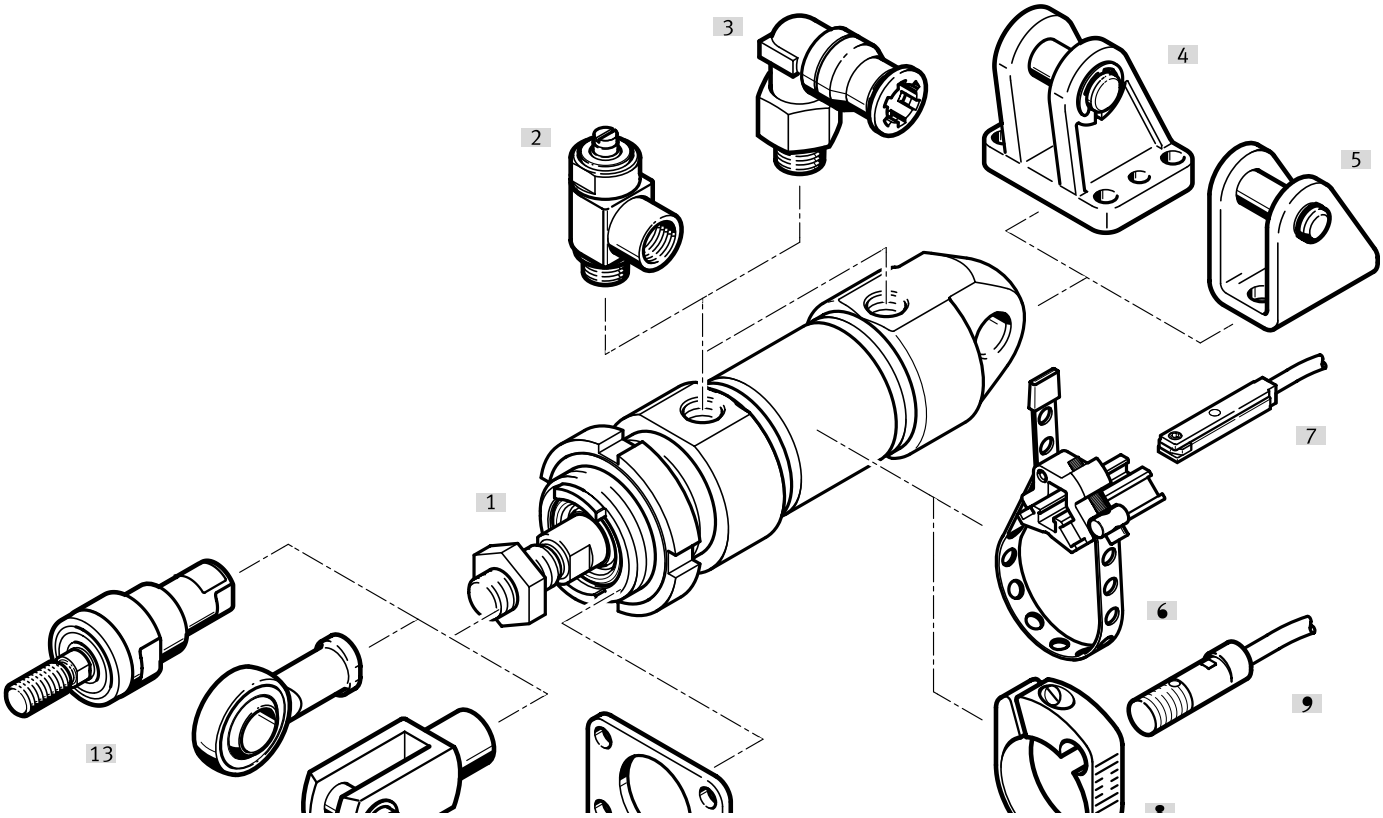

Peripherals overview

Mounting attachments and accessories		Description	CRDSNU-			→ Page/Internet
			Basic version	MQ	MG	
[1]	Round cylinder CRDSNU-32 ... 100-...					
[2]	One-way flow control valve CRGRLA	For regulating speed	■	■	■	43
[3]	Push-in fitting CRQS	For connecting tubing with standard O.D.	■	■	■	qs
[4]	Clevis foot CRLBN	For end caps	■	–	■	40
[5]	Clevis foot LBG	For end caps	■	–	■	40
[6]	Mounting kit DASP-C1	For proximity switch CRSMT-8M	■	■	■	43
[7]	Mounting kit SMBR-...-S6	For proximity switch CRSMT-8M	■	■	■	43
[8]	Proximity switch CRSMT-8M	• Design for T-slot • For position sensing	■	■	■	42
[9]	Flange mounting CRFV	• 1 included in the scope of delivery • For bearing caps	■	■	–	39
[10]	Rod clevis CRSG	Permits a swivelling movement of the cylinder in one plane	■	■	■	41
[11]	Rod eye CRSGS	With spherical bearing	■	■	■	41
[12]	Self-aligning rod coupler CRFK	To compensate for radial and angular deviations	■	■	■	41

Peripherals overview

CRDSNU-32 ... 100-...-S2 – Through piston rod

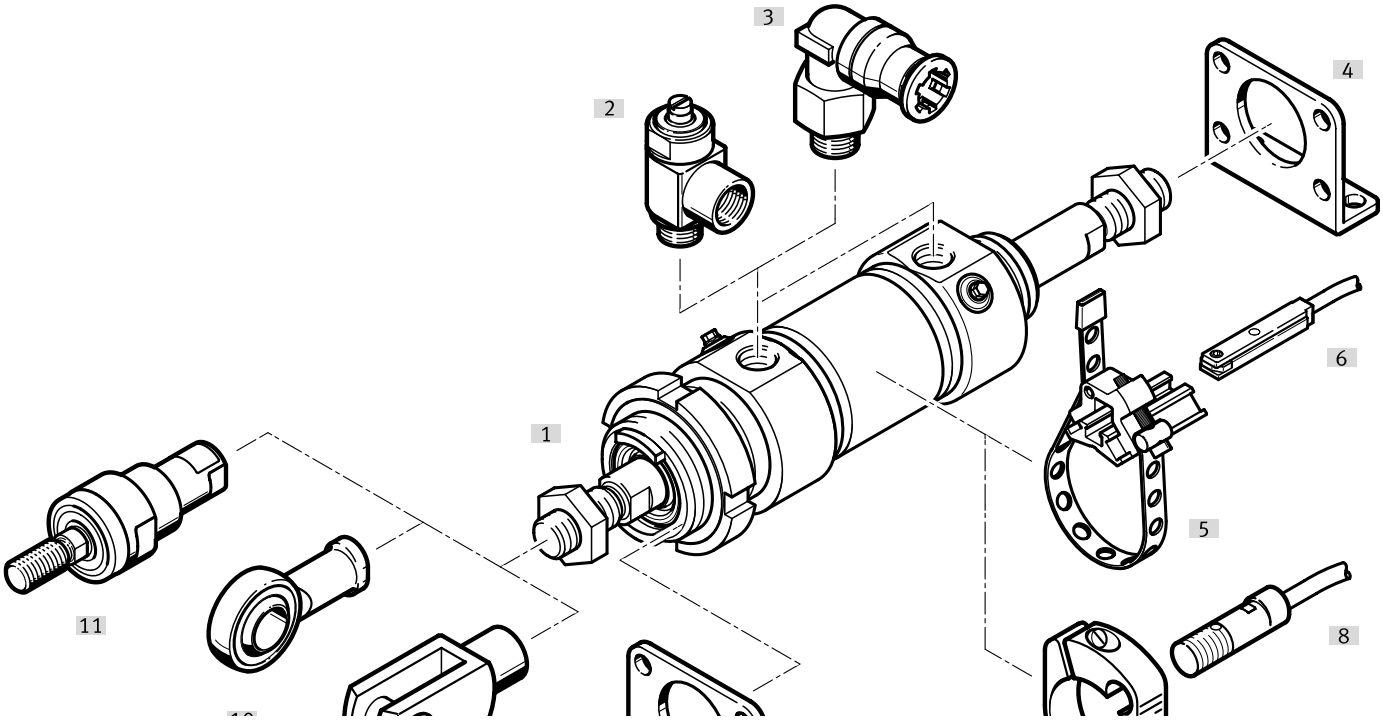

Peripherals overview

Mounting attachments and accessories			
		Description	→ Page/Inter-net
[1]	Round cylinders with through piston rod CRDSNU-32 ... 100-...-S2		
[2]	One-way flow control valve CRGRLA	For regulating speed	43
[3]	Push-in fitting CRQS	For connecting tubing with standard O.D.	qs
[4]	Foot mounting CRH	• 2 included in the scope of delivery • For bearing and end caps	38
[5]	Mounting kit DASP-C1	For proximity switch CRSMT-8M	43
[6]	Mounting kit SMBR-...-S6	For proximity switch CRSMT-8M	43
[7]	Proximity switch CRSMT-8M	• Design for T-slot • For position sensing	42
[9]	Rod clevis CRSG	Permits a swivelling movement of the cylinder in one plane	41
[10]	Rod eye CRSGS	With spherical bearing	41
[11]	Self-aligning rod coupler CRFK	To compensate for radial and angular deviations	41

Type codes

001	Series	
CRDSNU	Round cylinder, double-acting, stainless steel	

002	Piston diameter	
32	32	
40	40	
50	50	
63	63	
80	80	
100	100	

003	Stroke	
...	1 ... 500	

004	Cushioning	
P	Elastic cushioning rings/plates on both sides	
PPS	Pneumatic cushioning, self-adjusting at both ends	
PPV	Pneumatic cushioning, adjustable at both ends	

005	Position sensing	
A	For proximity sensor	

006	Cylinder end cap	
	Standard	
MQ	Short end cap without swivel mounting	
MG	Bearing cap without mounting thread	

007	Scraper variant	
	None	
A1	Increased chemical resistance	
A2	Hard scraper	
A3	For unlubricated operation	

008	Piston rod type	
	At one end	
S2	Through piston rod	

009	Piston rod thread extension	
	None	
...K2	1 ... 70 mm	

010	Piston rod thread type	
	Male thread	
K3	Female thread	

011	Custom thread	
“M10”K5	M10	
“M12”K5	M12	
“M16”K5	M16	
“M20”K5	M20	

012	Piston rod extension	
	None	
...K8	1 ... 500 mm	

013	Temperature resistance	
	Standard	
S6	Heat-resistant seals max. 120 °C	

014	Temperature range	
	Standard	
TT	-40 ... +80°C	

015	EU certification	
	None	
EX4	II 2GD	

Datasheet

P cushioning

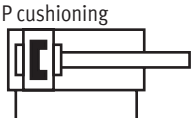

Diameter
32 ... 100 mm

Stroke length
1 ... 500 mm
Longer strokes on request

Spare parts service

General technical data								
Piston ⌀			32	40	50	63	80	100
Pneumatic connection			G1/8	G1/4	G1/4	G3/8	G3/8	G1/2
Piston rod thread			M10x1.25	M12x1.25	M16x1.5	M16x1.5	M20x1.5	M20x1.5
Design			Piston					
			Piston rod					
			Cylinder barrel					
Cushioning	P		Elastic cushioning rings/plates at both ends					
	PPV		Cushioning, adjustable at both ends					
	PPS		Cushioning, self-adjusting at both ends					
Cushioning length	PPV	[mm]	14	18	20	21	31	31
	PPS	[mm]	14	18	20	21	31	31
Position sensing			Via proximity switch					
Type of mounting			With accessories					
			With male thread					
Mounting position			Any					

Operating conditions		
Operating medium		Compressed air to ISO 8573-1:2010 [7:4:4]
Note on the operating/ pilot medium		Lubricated operation possible (in which case lubricated operation will always be required)
Operating pressure[1]	[MPa]	0.1 ... 1
	[bar]	1 ... 10
	[psi]	14.5 ... 145

1) An increase in the minimum operating pressure is possible with variants

Environmental conditions					
Standards-based cylinder		Basic type/A3	A1	TT	S6
Ambient temperature1)	[°C]	–20 ... +80	0 ... +80	–40 ... +80	0 ... +120
Corrosion resistance class CRC					
⌀ 32 ... 63		3 - High corrosion stress 2)			
⌀ 80 ... 100		4 - Particularly high corrosion stress. [2]			

1) Note operating range of proximity switches
2) More information www.festo.com/x/topic/crc

Datasheet

ATEX[1]	
ATEX category for gas	II 2G
Type of ignition protection for gas	Ex h IIC T4 Gb
ATEX category for dust	II 2D
Type of (ignition) protection for dust	Ex h IIIC T120°C Db
Explosion-proof ambient temperature	–20 °C <= Ta <= +60 °C
CE marking (see declaration of conformity)	To EU Explosion Protection Directive (ATEX)
Explosion protection certification outside the EU	EPL Gb (GB)
	EPL Db (GB)

1) Note the ATEX certification of the accessories.

Forces [N] and impact energy [J]						
Piston ⌀	32	40	50	63	80	100
Theoretical force at 0.6 MPa (6 bar, 87 psi), advancing	483	754	1178	1870	3016	4712
Theoretical force at 0.6 MPa (6 bar, 87 psi), retracting	415	633	990	1682	2721	4418
Impact energy in the end positions for P cushioning1)	0.4	0.7	1.0	1.3	1.8	2.5

1) The values are reduced by approx. 50% at an ambient temperature of 80 °C

Weight [g]						
Piston ⌀	32	40	50	63	80	100
Basic weight with 0 mm stroke	670	1327	2020	2943	5891	8527
Additional weight per 10 mm stroke	15	24	40	44	68	75
Moving mass with 0 mm stroke	118	232	416	472	860	1018
Additional mass per 10 mm stroke	9	16	25	25	39	39

Datasheet

Max. transverse force Fq as a function of projection l

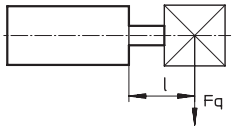

Basic version

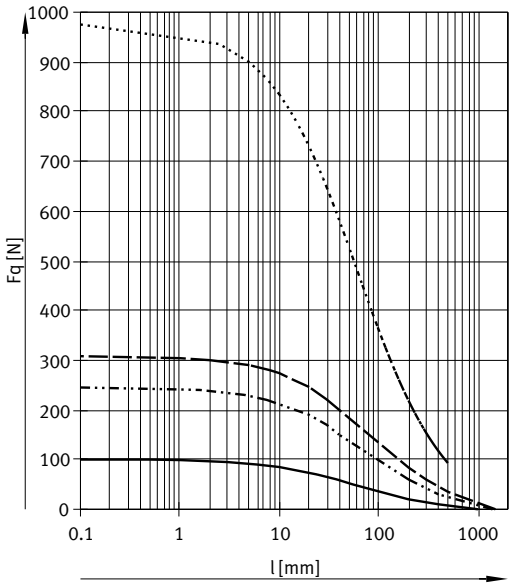

S2 – Through piston rod

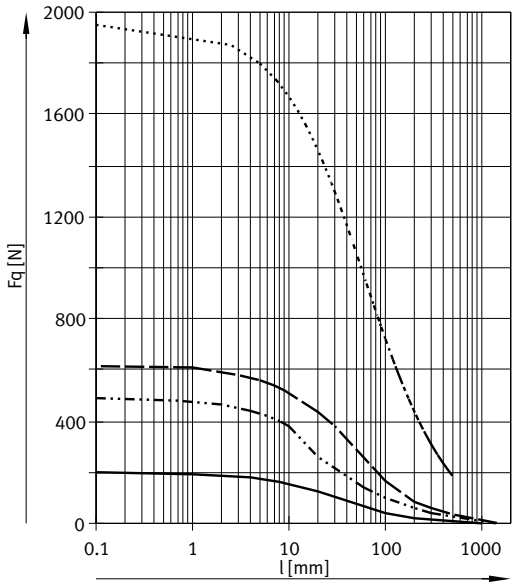

CRDSNU-32
CRDSNU-40
CRDSNU-50/63
CRDSNU-80/100

Materials

Sectional view

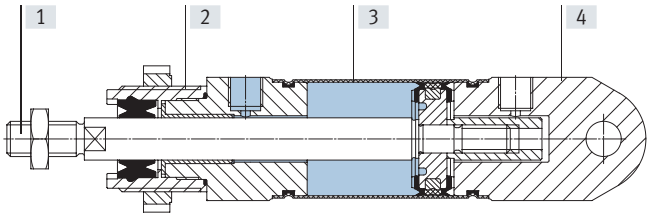

Standards-based cylinder		Basic version	A1	A3	TT	S6
[1]	Piston rod	High-alloy stainless steel				
[2]	Bearing cap	High-alloy stainless steel				
[3]	Cylinder barrel	High-alloy stainless steel				
[4]	End cap	High-alloy stainless steel				
–	Seals	TPE-U (PUR) media seal (modified for resistance to hydrolysis and cleaning)	FPM	UHMW-PE	TPE-U (PUR) (suitable for low temperatures)	FPM
	Note on materials	RoHs-compliant				
	Cleanroom class	Class 5 to ISO 14644-1				
	LABS (PWIS) conformity	VDMA 24364-B2-L		VDMA 24364-Zone III	VDMA 24364-B2-L	
	Food-safe	See declaration of conformity1)				

1) For information about the area of use, see the EC declaration of conformity at: www.festo.com/Certificates/CRDSNU_PUB

Datasheet

Dimensions Download CAD data ➔ www.festo.com

Basic version

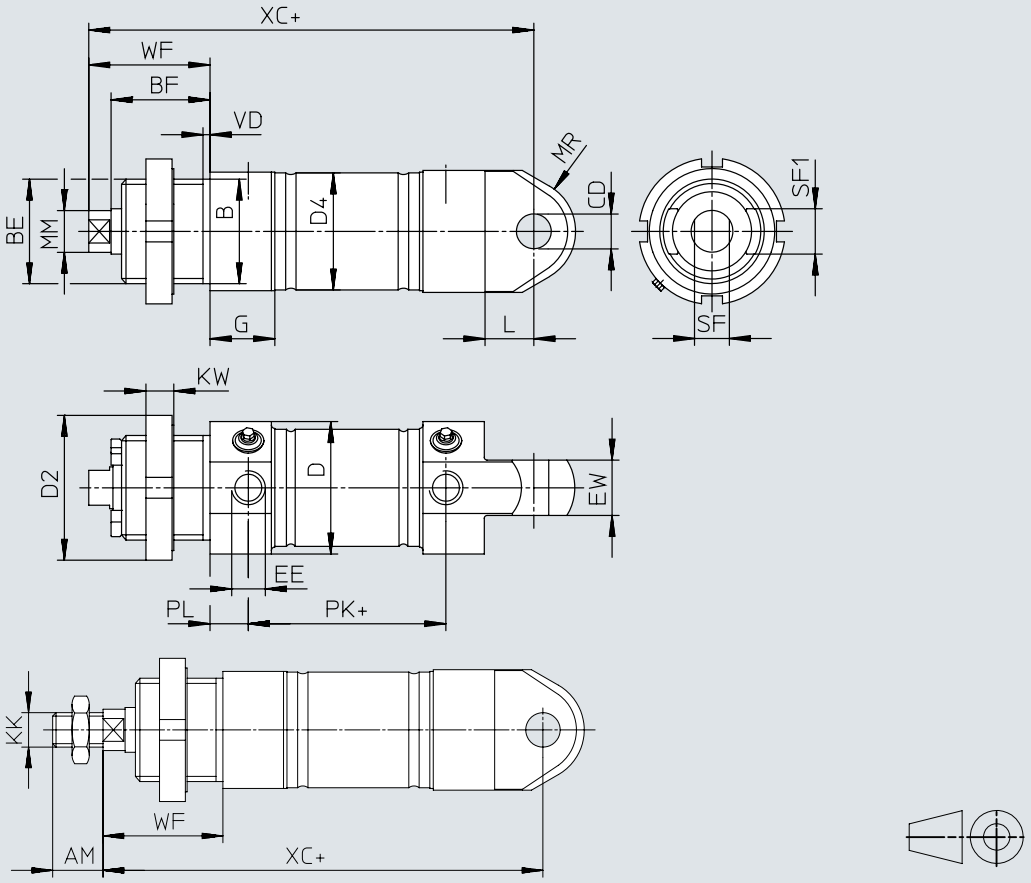

\+ = plus stroke length

Datasheet

ø [mm]	AM	B ø h9	BE	BF	CD ø H8	D ø	D2 ø	D4 ø
32	22	30	M30x1.5	28.4	10	38	42	33.6
40	24	38	M38x1.5	32	12	49	50	41.6
50	32	45	M45x1.5	36.4	16	57	60	52.4
63	32	45	M45x1.5	36.4	16	70	60	65.4
80	40	50	M50x2	42.2	20	88	75	82.8
100	40	50	M50x2	42.2	20	108	75	102.8

ø [mm]	EE	EW	G	KK	KW	L	MM ø
32	G1/8	16	18.6	M10x1.25	8	14	12
40	G1/4	18	24.7	M12x1.25	10	16	16
50	G1/4	21	24.4	M16x1.5	10	17	20
63	G3/8	21	27.4	M16x1.5	10	17	20
80	G3/8	35	32.4	M20x1.5	13	22	25
100	G1/2	35	32.4	M20x1.5	13	22	25

ø [mm]	MR	PL	ST	SF1	VD	WF	XC ±1
32	15	9	10	13	4.3	34	118
40	19	12	13	18	4.3	39	140
50	22.5	12	17	22	4.3	44	147
63	22.5	13	17	22	4.3	44	156
80	30	16	22	22	4.5	50	193
100	36	16	22	22	4.5	50	196

Datasheet

Dimensions Download CAD data ➔ www.festo.com

MQ – Short end cap without swivel mounting

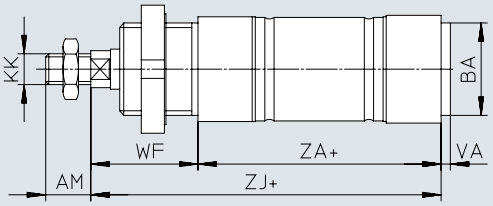

MG – Bearing cap without mounting thread

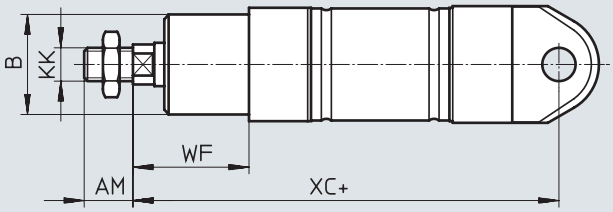

MQ-K3 – Short end cap without swivel mounting, with female piston rod thread

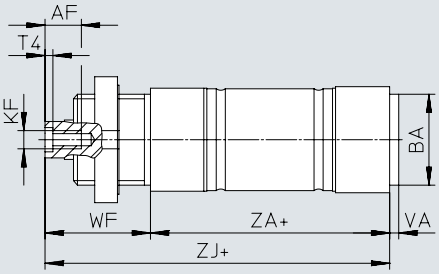

MG-K3 – Bearing cap without mounting thread, with female piston rod thread

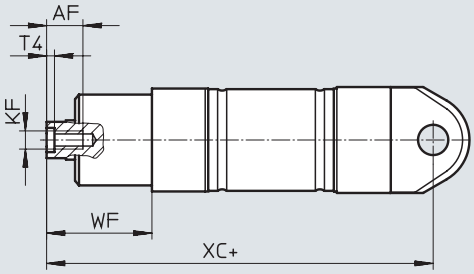

S2 – Through piston rod

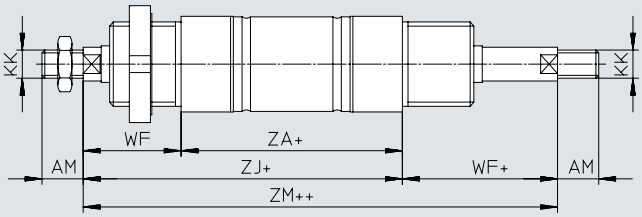

S2-K3 – Through piston rod, with female thread

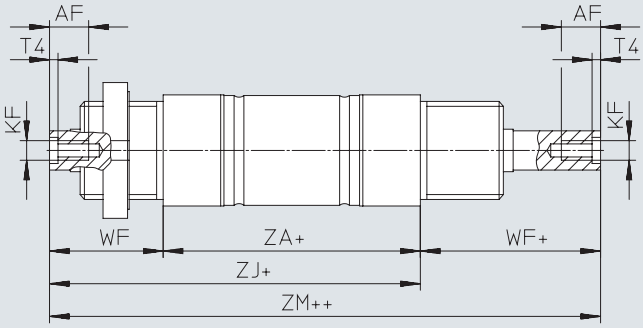

\+ = plus stroke length

++ = plus 2x stroke length

Datasheet

ø [mm]	AF	AM	B ø h9	BA h9	KF	KK
32	12	22	30	30	M6	M10x1.25
40	12	24	38	38	M8	M12x1.25
50	16	32	45	45	M10	M16x1.5
63	16	32	45	45	M10	M16x1.5
80	20	40	50	45	M12	M20x1.5
100	20	40	50	55	M12	M20x1.5

ø [mm]	T4	VA	WF	XC ±1	ZA	ZJ	ZM
32	2.6	3	34	118	69.5	104	138
40	3.3	4	39	140	84.6	124	163
50	4.7	4	44	147	86.2	130	175
63	4.7	4	44	156	94.2	139	183
80	6.1	4	50	193	120.7	171	221
100	6.1	4	50	196	123.7	174	224

Datasheet

Dimensions Download CAD data ➔ www.festo.com

K2 – Extended male piston rod thread

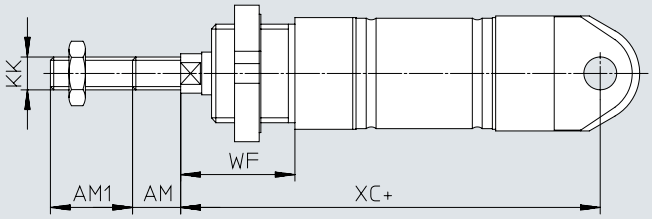

K3 – Female piston rod thread

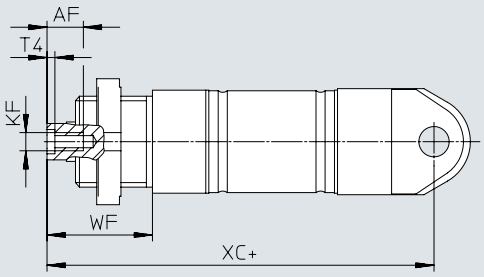

K5 – Special piston rod thread

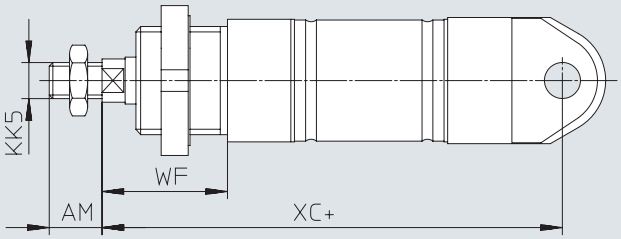

K8 – Extended piston rod

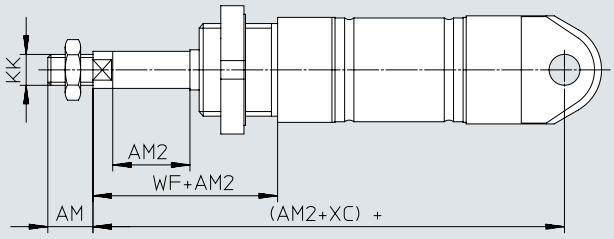

K3-K8 – Extended piston rod, with female thread

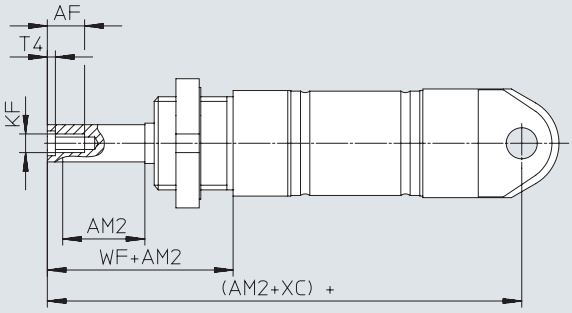

TT – Low temperature / A2 – Hard wiper

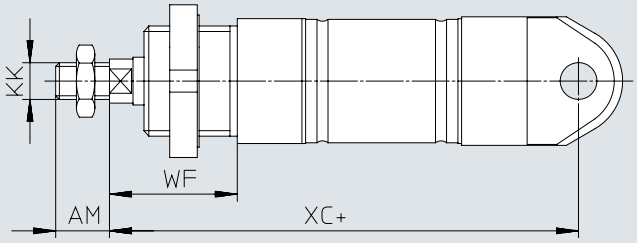

\+ = plus stroke length

Datasheet

ø [mm]	AF	AM	AM1 max.	AM2 max.	KF
32	12	22	1 ... 35	1 ... 500	M6
40	12	24	1 ... 35	1 ... 500	M8
50	16	32	1 ... 70	1 ... 500	M10
63	16	32	1 ... 70	1 ... 500	M10
80	20	40	1 ... 70	1 ... 500	M12
100	20	40	1 ... 70	1 ... 500	M12

ø [mm]	KK	KK5	T4	WF	XC ±1
32	M10x1.25	M10	2.6	34	118
40	M12x1.25	M12	3.3	39	140
50	M16x1.5	M16	4.7	44	147
63	M16x1.5	M16	4.7	44	156
80	M20x1.5	M20	6.1	50	193
100	M20x1.5	M20	6.1	50	196

Ordering data

Ordering data

Type	Piston Ø [mm]	Stroke [mm]	P – Elastic cushioning rings/plates A – With position sensing Part no.	Type
	32	10	**8152637**	**CRDSNU-32-10-P-A**
		25	**8152638**	**CRDSNU-32-25-P-A**
		40	**8152639**	**CRDSNU-32-40-P-A**
		50	**8152640**	**CRDSNU-32-50-P-A**
		80	**8152641**	**CRDSNU-32-80-P-A**
		100	**8152642**	**CRDSNU-32-100-P-A**

Ordering data – Parts in stock

Type	Piston Ø [mm]	Stroke [mm]	PPS – Pneumatic cushioning, self-adjusting at both ends A – With position sensing MG – Bearing cap without mounting thread A1 – Wiper variant: increased chemical resistance Part no.	Type
	32	10	**2176399**	**CRDSNU-B-32-10-PPS-A-MG-A1**
		25	**2176400**	**CRDSNU-B-32-25-PPS-A-MG-A1**
		40	**2176401**	**CRDSNU-B-32-40-PPS-A-MG-A1**
		50	**2176402**	**CRDSNU-B-32-50-PPS-A-MG-A1**
		80	**2176403**	**CRDSNU-B-32-80-PPS-A-MG-A1**
		100	**2176404**	**CRDSNU-B-32-100-PPS-A-MG-A1**
		125	**2176405**	**CRDSNU-B-32-125-PPS-A-MG-A1**
		160	**2176406**	**CRDSNU-B-32-160-PPS-A-MG-A1**
		200	**2176407**	**CRDSNU-B-32-200-PPS-A-MG-A1**
	40	10	**8073989**	**CRDSNU-B-40-10-PPS-A-MG-A1**
		25	**8073988**	**CRDSNU-B-40-25-PPS-A-MG-A1**
		40	**8073987**	**CRDSNU-B-40-40-PPS-A-MG-A1**
		50	**8073986**	**CRDSNU-B-40-50-PPS-A-MG-A1**
		80	**8073985**	**CRDSNU-B-40-80-PPS-A-MG-A1**
		100	**8073984**	**CRDSNU-B-40-100-PPS-A-MG-A1**
		125	**8073983**	**CRDSNU-B-40-125-PPS-A-MG-A1**
		160	**8073982**	**CRDSNU-B-40-160-PPS-A-MG-A1**
		200	**8073981**	**CRDSNU-B-40-200-PPS-A-MG-A1**

Note

The bearing cap on stocked parts is made of one piece.
When ordered using the modular product system, the bearing cap is made of two pieces, which makes it possible to exchange the wiper in the event of a repair.

Ordering data

Ordering table – Modular product system											
Size		32	40	50	63	80	100	Conditions	Code		Enter code
Module no.		552791	552792	552793	552794	8126418	8126417				
Version		Stainless steel							**CR**		CR
Function		Round cylinder, double-acting							**DSNU**		DSNU
Piston ø	[mm]	32	40	50	63	80	100		**-...**		
Stroke	[mm]	1 ... 500						[1]	**-...**		
Cushioning		Elastic cushioning rings/plates at both ends							**-P**		
		Pneumatic cushioning, self-adjusting						[2]	**-PPS**		
		Pneumatic cushioning, adjustable at both ends							**-PPV**		
Position sensing		Via proximity switch							**-A**		-A
Cylinder end cap		Short end cap without swivel mounting							**-MQ**		
		Bearing cap without mounting thread							**-MG**		
Wiper variant		Increased chemical resistance						[2]	**-A1**		
		Hard wiper				–		[2] [3]	**-A2**		
		Unlubricated operation						[2]	**-A3**		
Piston rod type		Through piston rod						[3] [4]	**-S2**		
Extended male thread		Extended male piston rod thread									
	[mm]	1 ... 35		1 ... 70					**-...K2**		
Female thread		Piston rod with female thread									
		M6	M8	M10	M10	M12	M12	[5]	**-K3**		
Special thread		Special piston rod thread									
		M10	M12	M16	M16	M20	M20		**-"..."K5**		
Extended piston rod	[mm]	1 ... 500							**-...K8**		
Temperature resistance		Heat-resistant seals max. +120 °C							**-S6**		
Low temperature		Seals and lubricating grease from –40 °C ... +80 °C				–		[3] [6]	**-TT**		
EU certification (ATEX)		II 2GD						[7]	**-EX4**		

[1]	-...	Longer strokes on request
[2]	PPS, A1, A2, A3	Not with S6, TT
[3]	A2, S2, TT	Not with MG
[4]	S2	Not with MQ
[5]	K3	Not with K2, K5
[6]	TT	Not with S6
[7]	EX4	Not with S6, TT

Accessories

Foot mounting CRHBN

Scope of delivery:
CRHBN-... x1: 1 foot
CRHBN-... x2: 2 feet, 1 nut

Material:
High-alloy steel

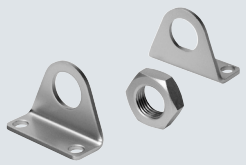

CRHBN-...x2

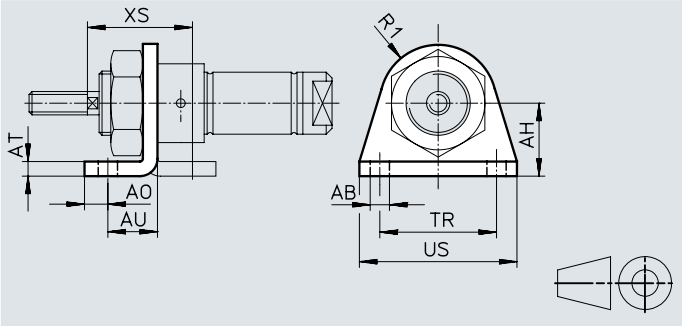

Dimensions and ordering data

for ⌀ [mm]	AB ⌀	AH	AO	AT	AU	R1	TR	US	XS	CRC[1]	Weight [g]	Part no.	Type
12	5.5	20	6	4	14	13	32	42	32	4	43	**161866**	**CRHBN-12/16x1**
16	5.5	20	6	4	14	13	32	42	32	4	107	**162999**	**CRHBN-12/16x2**
20	6.6	25	8	5	17	20	40	54	36	4	94	**161867**	**CRHBN-20/25x1**
25	6.6	25	8	5	17	20	40	54	40	4	236	**162998**	**CRHBN-20/25x2**

1) More information www.festo.com/x/topic/crc

Foot mounting CRH

Material:
High-alloy steel

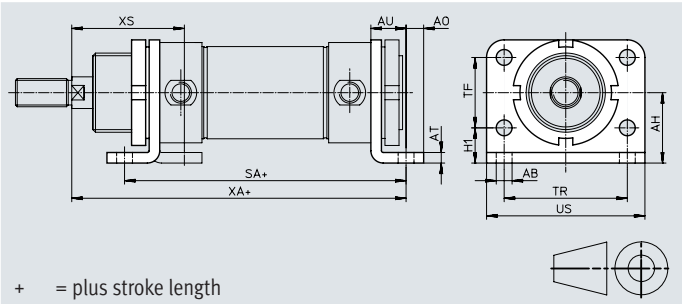

+ = plus stroke length

Dimensions and ordering data

for ⌀ [mm]	AB ⌀	AH	AO	AT	AU	H1	SA	TF	TR	US	XA	XS	CRC[1]	Weight [g]	Part no.	Type
32	7	28	7	4	14	14	124	28	52	66	148	48	4	237	**162951**	**CRH-32**
40	9	33	10	5	20	18	153	30	60	80	178	60	4	341	**162952**	**CRH-40**
50	9	40	10	6	20	20	160	40	70	90	190	64	4	559	**162953**	**CRH-50**
63	9	45	10	6	20	20	164	50	76	96	195	64	4	680	**162954**	**CRH-63**

1) More information www.festo.com/x/topic/crc

Swivel mounting CRSBN

Material:
High-alloy steel

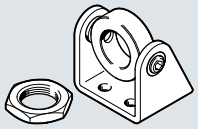

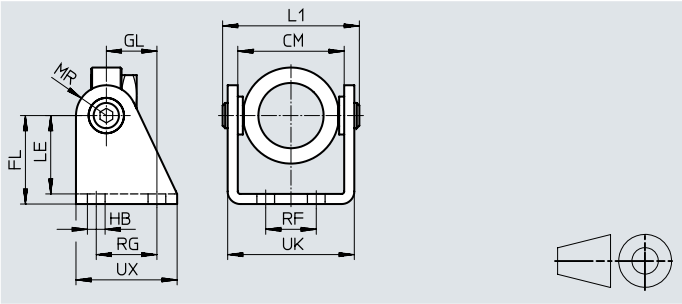

Dimensions and ordering data

for ⌀ [mm]	CM	FL	GL	HB ⌀	L1	LE	MR	RF	RG	UK	UX	CRC[1]	Weight [g]	Part no.	Type
20	38.1	35	20	7	55	31	12	20	24	50.1	40	4	230	**552904**	**CRSBN-20/25**
25															

1) More information www.festo.com/x/topic/crc

Accessories

Flange mounting CRFBN

Material:
High-alloy steel

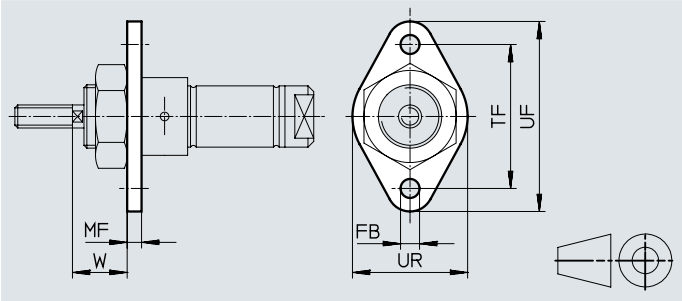

Dimensions and ordering data

for Ø [mm]	FB Ø	MF	TF	UF	UR	W	CRC[1]	Weight [g]	Part no.	Type
12, 16	5.5	4	40	53	30	18	4	26	**161864**	**CRFBN-12/16**
20	6.6	5	50	66	40	19	4	52	**161865**	**CRFBN-20/25**
25	6.6	5	50	66	40	23	4	52	**161865**	**CRFBN-20/25**

1) More information www.festo.com/x/topic/crc

Flange mounting CRFV

Material:
High-alloy steel

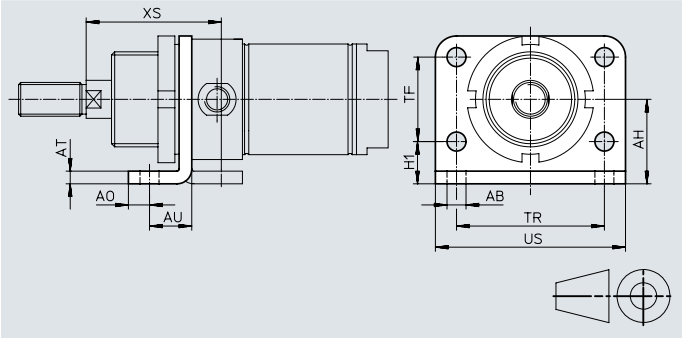

Dimensions and ordering data

for Ø [mm]	AB Ø	AH	AO	AT	AU	H1	TF	TR	US	XS	CRC[1]	Weight [g]	Part no.	Type
32	7	28	7	4	14	14	28	52	66	48	4	102	**161858**	**CRFV-32**
40	9	33	10	5	20	18	30	60	80	60	4	190	**161859**	**CRFV-40**
50	9	40	10	6	20	20	40	70	90	64	4	290	**161860**	**CRFV-50**
63	9	45	10	6	20	20	50	76	96	64	4	365	**161861**	**CRFV-63**

1) More information www.festo.com/x/topic/crc

Accessories

Clevis foot CRLBN

Material:
High-alloy steel

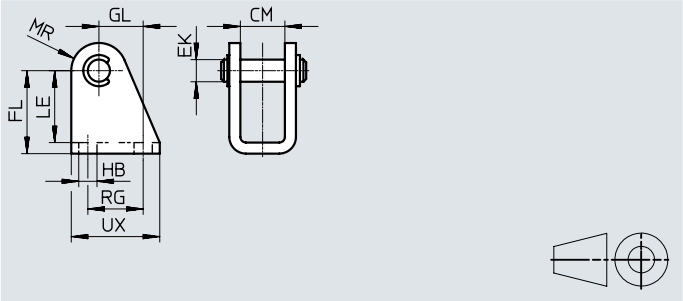

Dimensions and ordering data

for ⌀ [mm]	CM	EK ⌀	FL	GL	HB	LE	MR	RG	UX	CRC[1]	Weight [g]	Part no.	Type
12, 16	12.1	6	27 +0.3/–0.2	13	5.5	24	7	15	25	4	39	**161862**	**CRLBN-12/16**
20, 25	16.1	8	30 +0.4/–0.2	16	6.6	26	10	20	32	4	82	**161863**	**CRLBN-20/25**
32	16.1	10	35 +0.4/–0.2	18.5	6.6	31	11	24	35	4	106	**195866**	**CRLBN-32**
40	18.1	12	40 +0.4/–0.2	24.5	9	35	13	30	45	4	185	**195867**	**CRLBN-40**
50, 63	21.1	16	45 +0.5/–0.2	28	9	39	14	34	50	4	293	**195868**	**CRLBN-50/63**

1) More information www.festo.com/x/topic/crc

Clevis foot LBG-...-R3
The pivot pin is secured against rotation with a spring pin.

Material: High-alloy stainless steel
RoHs-compliant

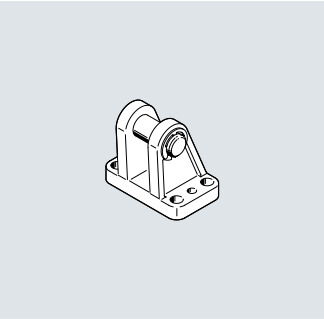

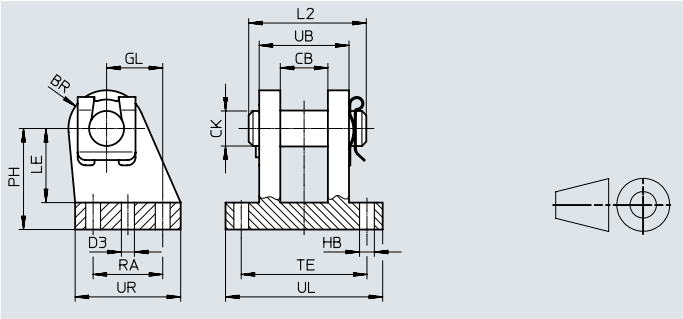

Dimensions and ordering data

for ⌀ [mm]	CL	CM	EK ⌀	FL	GL	HB ⌀	L2	LE	MR
80	50	25.1	20	63	30	11	60	49	18
100	50	25.1	20	71	41	11	60	56	22

for ⌀ [mm]	RF	RG	S1 ⌀	UK	UX	CRC[1]	Weight [g]	Part no.	Type
80	70	36	7.8	89	55	3	1050	**2078797**	**LBG-80-R3**
100	70	46	9.8	89	65	3	1375	**2078799**	**LBG-100-R3**

1) More information www.festo.com/x/topic/crc

Accessories

Nut CR

Material:
High-alloy steel

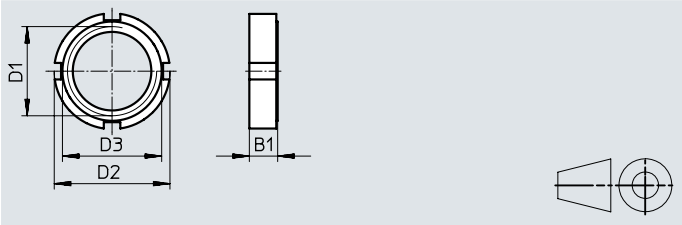

Dimensions and ordering data

for ⌀ [mm]	B1	D1	D2	D3	CRC[1]	Weight [g]	Part no.	Type
32	8	M30x1.5	42	36	4	40	**197326**	**CR-M30x1.5**
40	10	M38x1.5	50	48	4	61	**197327**	**CR-M38x1.5**
50, 63	10	M45x1.5	60	56	4	89	**197328**	**CR-M45x1.5**
80, 100	13	M50x2	75	67	4	228	**197329**	**CR-M50x2**

1) More information www.festo.com/x/topic/crc

Ordering data – Piston rod attachments, corrosion-resistant

Datasheets → Internet: kolbenstangenaufsatz

Rod eye CRSGS

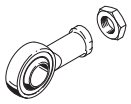

for ⌀	Part no.	Type
12, 16	**195580**	**CRSGS-M6**
20	**195581**	**CRSGS-M8**
25, 32	**195582**	**CRSGS-M10x1.25**
40	**195583**	**CRSGS-M12x1.25**
50, 63	**195584**	**CRSGS-M16x1.5**
80, 100	**195585**	**CRSGS-M20x1.5**

Rod clevis CRSG

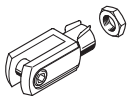

for ⌀	Part no.	Type
12, 16	**13567**	**CRSG-M6**
20	**13568**	**CRSG-M8**
25, 32	**13569**	**CRSG-M10x1.25**
40	**13570**	**CRSG-M12x1.25**
50, 63	**13571**	**CRSG-M16x1.5**
80, 100	**13572**	**CRSG-M20x1.5**

Self-aligning rod coupler CRFK

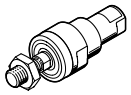

for ⌀	Part no.	Type
25, 32	**2305778**	**CRFK-M10x1.25**
40	**2305779**	**CRFK-M12x1.25**
50, 63	**2490673**	**CRFK-M16x1.5**
80, 100	**2545677**	**CRFK-M20x1.5**

Accessories

Ordering data – Proximity switches CRSMT-8M for T-slot, magneto-resistive

Datasheets → Internet: crsmt

	Type of mounting	Switching output	Electrical connection	Cable length [m]	Part no.	Type
N/O						
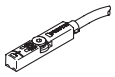	Inserted in the slot from above, flush with the cylinder profile	PNP	Cable, 3-core	5.0	**574380**	**CRSMT-8M-PS-24V-K-5.0-OE**
			Cable, 3-core	10.0	**574381**	**CRSMT-8M-PS-24V-K-10.0-OE**
			Plug M8x1, 3-pin	0.3	**574383**	**CRSMT-8M-PS-24V-K-0.3-M8D**
			Plug M12x1, 3-pin	0.3	**574382**	**CRSMT-8M-PS-24V-K-0.3-M12**

Connecting cables NEBA, straight, M8 connection

	Electrical connection 1, connection technology	Electrical connection 2, connection technology	Electrical connection 2, number of pins/cores	Cable length	Part no.	Type
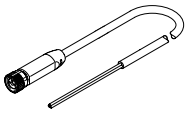	M8x1 A-coded to EN 61076-2-104	Open end	3	2.5 m	**8078223**	**NEBA-M8G3-U-2.5-N-LE3**
				5 m	**8078224**	**NEBA-M8G3-U-5-N-LE3**

Connecting cables NEBA, straight, M12 connection

	Electrical connection 1, connection technology	Electrical connection 2, connection technology	Electrical connection 2, number of pins/cores	Cable length	Part no.	Type
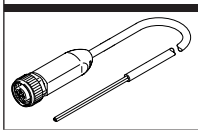	M12x1, A-coded to EN 61076-2-101	Open end	3	2.5 m	**8078236**	**NEBA-M12G5-U-2.5-N-LE3**
				5 m	**8078237**	**NEBA-M12G5-U-5-N-LE3**

Connecting cables NEBA, angled, M8 connection

	Electrical connection 1, connection technology	Electrical connection 2, connection technology	Electrical connection 2, number of pins/cores	Cable length	Part no.	Type
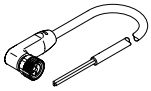	M8x1 A-coded to EN 61076-2-104	Open end	3	2.5 m	**8078230**	**NEBA-M8W3-U-2.5-N-LE3**
				5 m	**8078231**	**NEBA-M8W3-U-5-N-LE3**

Connecting cables NEBA, angled, M12 connection

	Electrical connection 1, connection technology	Electrical connection 2, connection technology	Electrical connection 2, number of pins/cores	Cable length	Part no.	Type
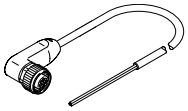	M12x1, A-coded to EN 61076-2-101	Open end	3	2.5 m	**8078245**	**NEBA-M12W5-U-2.5-N-LE3**
				5 m	**8078246**	**NEBA-M12W5-U-5-N-LE3**

Accessories

Ordering data – Mounting kit DASP-C1, corrosion-resistant

Datasheets → Internet: dasp

	for ⌀	Retaining bracket material	Ambient temperature	Food-safe1)	CRC[2)]	Part no.	Type
	12	PP	-40 ... 80 °C	See supplementary material information	4	**8228621**	**DASP-C1-12-A-R1**
	16					**8228622**	**DASP-C1-16-A-R1**
	20					**8228623**	**DASP-C1-20-A-R1**
	25					**8228624**	**DASP-C1-25-A-R1**
	32					**8228625**	**DASP-C1-32-A-R1**
	40					**8228626**	**DASP-C1-40-A-R1**
	50					**8228627**	**DASP-C1-50-A-R1**
	63					**8228628**	**DASP-C1-63-A-R1**

1) More information: www.festo.com/certificates/FP_01-50-02-16
2) More information www.festo.com/x/topic/crc

Ordering data – Mounting kit SMBR-...-S6

Datasheets → Internet: smbr

	for ⌀	Housing material	Ambient temperature	CRC[1)]	Part no.	Type
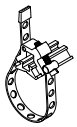	12 ... 100	Wrought aluminium alloy, anodised; high-alloy stainless steel	-20 ... 120 °C	4	**538937**	**SMBR-8-8/100-S6**

1) More information www.festo.com/x/topic/crc

Ordering data – One-way flow control valves CRGRLA

Datasheets → Internet: crgrla

	Connection Thread	For push-in fitting	Material	Part no.	Type
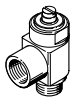	M5	CRQS/CRQSL/CRQST	Electropolished stainless-steel casting	**161403**	**CRGRLA-M5-B**
	G1/8			**161404**	**CRGRLA-1/8-B**
	G1/4			**161405**	**CRGRLA-1/4-B**
	G3/8			**161406**	**CRGRLA-3/8-B**
	G1/2			**161407**	**CRGRLA-1/2-B**

Ordering data – Air reservoirs CRVZS

Datasheets → Internet: crvzs

	Connection Thread	Volume [l]	Material	Part no.	Type
	G1/8	0.1	High-alloy stainless steel	**160233**	**CRVZS-0.1**
	G1/4	0.4		**160234**	**CRVZS-0.4**
	G1/4	0.75		**160235**	**CRVZS-0.75**
	G1/2	2		**160236**	**CRVZS-2**
	G1, G3/8	5		**192159**	**CRVZS-5**
	G1, G3/8	10		**160237**	**CRVZS-10**

Ordering data – Tubing

Datasheets → Internet: tubing

	Standard O.D. tubing	**PLN, PFAN**