Standards-based cylinders DSBC, to ISO 15552

Key features

At a glance

- Standards-based cylinders to ISO15552 (corresponds to the withdrawn standards ISO 6431, DIN ISO 6431, VDMA24562, NFE49003.1 and UNI 10290)
- Double-acting
- For contactless position sensing
- Available with protection against rotation
- EX4: for use in potentially explosive areas
- Extensive range of accessories makes it possible to install the cylinder virtually anywhere
- There is a choice of three types of cushioning:
  - P cushioning: elastic cushioning rings/plates at both ends
  - PPS cushioning: pneumatic cushioning, self-adjusting at both ends
  - PPV cushioning: pneumatic cushioning, adjustable at both ends
- The variants can be configured according to individual needs using a modular product system
- Excellent flexibility thanks to a wide range of variants

DSBC-...-C – with clamping unit, standard hole pattern

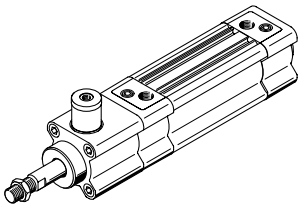

- Standard hole pattern
- Piston rod can be clamped in any position
- The piston rod can be held in position for long periods even with alternating loads, fluctuating operating pressure or leaks in the system

Additional measures are required for use in safety-related applications; in Europe, for example, the standards listed under the EC Machinery Directive must be observed.

Without additional measures in accordance with legally specified minimum requirements, the product is not suitable as a safety-related component in control systems.

DSBC-...-E1/-E2/-E3 – with end-position locking, standard hole pattern

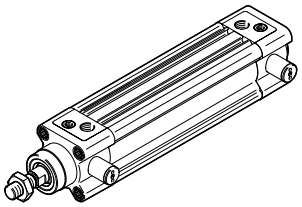

- Standard hole pattern
- Positive locking in the end position as a drop guard. In the event of a pressure drop, the piston rod is locked in its end position.
- Optionally at one or both ends

Additional measures are required for use in safety-related applications; in Europe, for example, the standards listed under the EC Machinery Directive must be observed.

Without additional measures in accordance with legally specified minimum requirements, the product is not suitable as a safety-related component in control systems.

DSBC-...-P2 – with bellows kit DADB, standard hole pattern

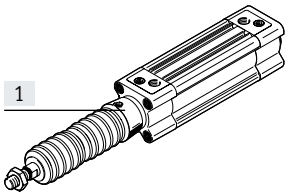

The bellows protects the piston rod, the seal and the bearing from the effects of a wide range of media, which has a positive impact on the service life of these components.

The bellows kit is a leak-free system. To prevent unwanted media from being drawn in, the supply and exhaust air for the kit must be ducted via a pressure compensation hole in the connection part [1].

The kit protects the piston rod, seal and bearing against a wide variety of media, for example:

- Dust
- Chippings
- Oil
- Grease
- Petrol

Ordering the bellows kit

An extended piston rod is absolutely essential if a bellows kit is to be used. The bellows kit can be ordered via the modular product system or as an accessory. The following must be noted in this case:

Ordering via the modular product system:
The bellows kit is supplied mounted on the bearing cap using feature P2. The required piston rod extension is automatically taken into consideration. This means that there is no need to specify a value for feature ...E.

Ordering as an accessory:
If the bellows kit is ordered as an accessory, the required value ➔ page 50 must be entered for feature ...E in the modular product system.

Key features

DSBC-...-D3 – Sensor slots on 3 sides

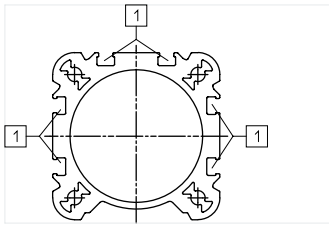

The piston position can be sensed on 3 sides of the drive if feature D3 is selected in the modular product system.

[1] Sensor slot for proximity switch

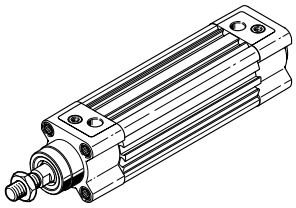

Note

DSBC-32-...-D3: Proximity switches with the mounting type “inserted in the slot lengthways” are not compatible.

DSBC-...-KE – with stroke adjustment

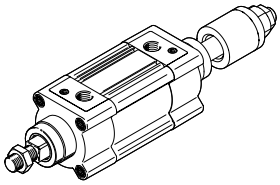

- Through piston rod with stroke adjustment
- Adjustment range of the extended end position

Position sensing/force control

With position transmitter SMAT, SDAT ➔ page 61

- Analogue position feedback possible
- Analogue output
  – 0 ... 10 V

With proportional-pressure regulator VPPM

Stepless adjustment of the gripping force possible

- Setpoint value input
  – 0 ... 10 V
  – 4 ... 20 mA

Optional accessories

Mounting kit DAVM ➔ Page 1

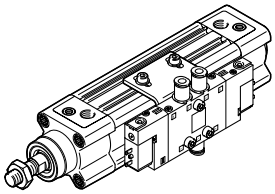

- For lateral valve mounting, directly on the drive
- Particularly suitable for decentralised use in large systems
- Mounting is only possible on the side on which the pneumatic connections are located

Application examples

Automatic screw machine

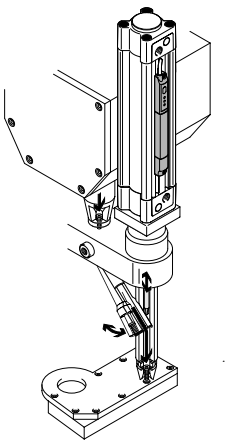

For process control

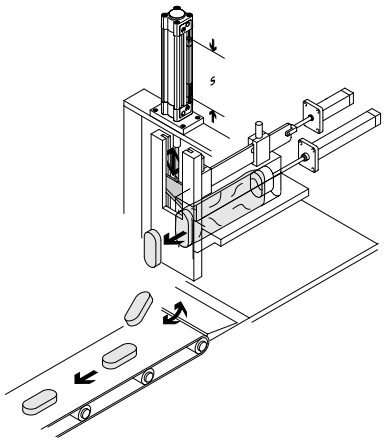

Key features

Variants from the modular product system

Symbol	Key features		Description
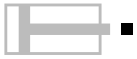	Q	Square piston rod	Protection against rotation. For position-oriented feeding
	C	Clamping unit	Integrated clamping unit on the piston rod
	E1/E2/E3	End-position locking	Positive locking in the end position as a drop guard. If there is a drop in pressure, the cylinder is secured in its end position to prevent it from dropping
	L	Low friction	• Break-away pressure: low • Dynamic response: suitable for very fast movements, especially at low operating pressures Application example: very dynamic movements with no standstill
	U	Constant, slow movement	• Break-away pressure: very low • Dynamic response: suitable for very slow, constant and stick-slip-free movements Application example: slow, constant feed motion
	L1	Low friction for balancer applications	• Break-away pressure: low • Dynamic response: suitable for slow movements with constant application of pressure at one end. System friction is independent of operating pressure Application example: balancing of a mass (balancer, belt tensioner with constant feed motion)
	T	Through piston rod	For working at both ends with the same force in the forward and return stroke, for attaching external stops
	KE	Stroke adjustment	Through piston rod with adjustment element mounted on one side. For limiting the extended end position and setting an exact stroke position.
	F	Female thread on the piston rod	–

Key features

Variants from the modular product system			
Symbol	Key features		Description
	R3	High corrosion protection	All external cylinder surfaces comply with corrosion resistance class 3 to Festo standard 940 070. The piston rod is made from corrosion- and acid-resistant steel
	T1	Heat-resistant seals	Temperature range 0 ... +120 °C
	T3	Low temperature	Temperature range –40 ... +80 °C
	T4	Heat-resistant seals	Temperature range 0 ... +150 °C
	A1	Scraper variant	Increased chemical resistance: For longer service life, e.g. when using cooling lubricants.
	A2	Scraper variant	Hard scraper: The cylinder has a hard-chromium plated piston rod and a hard scraper, which protects against dry, dusty and viscous media
	A3	Scraper variant	Unlubricated operation: Cleaning processes degrease the piston rod. A special piston rod seal designed for unlubricated operation permits a longer service life compared to the standard seal
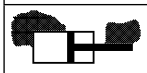	A6	Scraper variant	Metal scraper: The cylinder has a hard-chrome-plated piston rod and metal scraper, which scrapes off hard particles (e.g. welding spatter) that stick to the piston rod. Application: Use in welding equipment
	F1A	Recommended for production plants for manufacturing Li-ion batteries	Suitable for battery production with reduced Cu/Zn/Ni values (F1a)
	...E	Extended piston rod	–
	...L	Extended piston rod thread	–

Peripherals overview

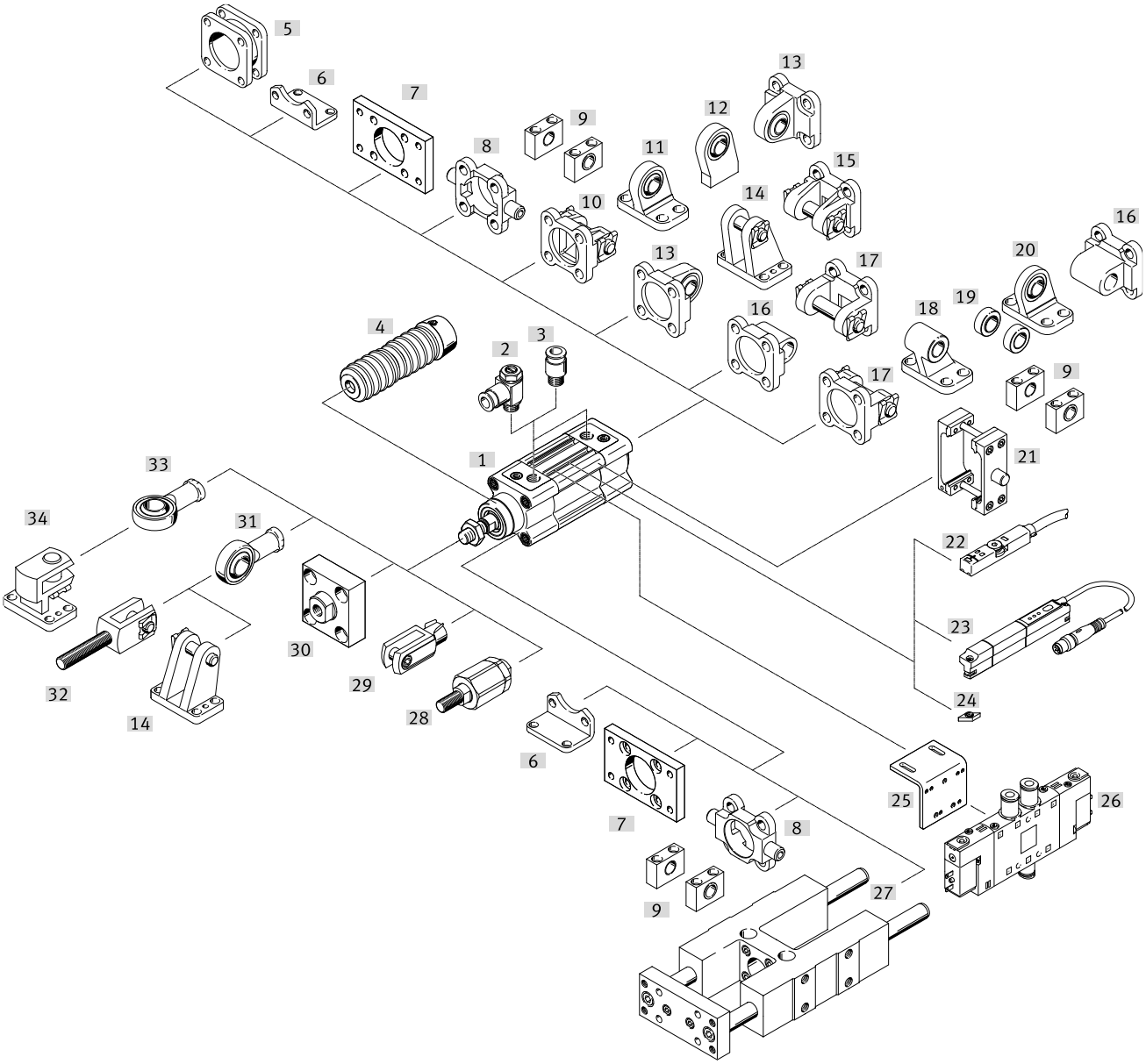

Mounting attachments and accessories		Description	DSBC-...-					→ Page/ Internet
				L/U/ L1	C	E1/E2/ E3	T	
[1]	Standards-based cylinder DSBC	Standards-based cylinder without accessories, basic design						
[2]	One-way flow control valve GRLA	For regulating speed	■	■	■	■	■	62
[3]	Push-in fitting QS	For connecting tubing with standard O.D.	■	■	■	■	■	qs
[4]	Bellows kit DADB	• Protects the cylinder (piston rod, seal and bearings) against a wide range of media and thus prevents premature wear • Can only be used in combination with an extended piston rod (E)	■	–	–	–	■	50
[5]	Multi-position kit DPNC	For connecting two cylinders with the same piston diameter to form a multi-position cylinder	■	–	■	■	■	54
[6]	Foot mounting HNC/CRHNC	For bearing or end caps	■	■	■	■	■	39

1) Cannot be mounted in combination with E1.
Can only be mounted on the end cap in combination with E2.
Can only be mounted on the bearing cap in combination with E3.

Peripherals overview

		Description	DSBC-...-					→ Page/ Internet
				L/U/ L1	C	E1/E2/ E3	T	
[7]	Flange mounting FNC/CRFNG	• For bearing or end caps • Cannot be used on the bearing cap in combination with bellows kit DADB	■	■	■	■	■	40
[8]	Trunnion flange ZNCF/CRZNG	• For bearing or end caps • Cannot be used on the bearing cap in combination with bellows kit DADB	■	■	■	■[1)]	■	41
[9]	Trunnion support LNZG/CRLNZG	–	■	■	■	■[1)]	■	42
[10] [15]	Swivel flange SNC	For end caps	■	■	■	■	–	43
[11]	Clevis foot LSNG	With spherical bearing	■	■	■	■	–	48
[12]	Clevis foot LSNSG	Weld-on, with spherical bearing	■	■	■	■	–	48
[13]	Swivel flange SNCS/CRSNCS/SNCS-...-R3	With spherical bearing for end caps	■	■	■	■	–	45
[14]	Clevis foot LBG/LBG-...-R3	–	■	■	■	■	–	48
[16]	Swivel flange SNCL	For end caps	■	■	■	■	–	46
[17]	Swivel flange SNCB/SNCB-...-R3	For end caps	■	■	■	■	–	44
[18]	Clevis foot LNG/CRLNG	–	■	■	■	■	–	48
[19] [20]	Clevis foot LSN	With spherical bearing	■	■	■	■	–	48
[21]	Trunnion flange kit DAMT	For mounting anywhere along the cylinder profile barrel	■	■	■	■	■	47
[22]	Proximity switch SME/SMT-8M/SDBT-MS	Can be integrated into the cylinder profile	■	■	■	■	■	59
[23]	Position transmitter SMAT/SDAT	• Continuously senses the position of the piston • Has an analogue output	■	■	■	■	■	61
[24]	Slot nut ABAN	Inserted in the slot from above	■	■	■	■	■	62
[25]	Mounting kit DAVM	For mounting the valve	■	■	■	■	■	55
[26]	Solenoid valve CPE/VUVG/VUVS	For standards-based cylinders	■	■	■	■	■	55
[27]	Guide unit FENG	For protecting standards-based cylinders against rotation at high torques	■	■	■	–	■	58
[28]	Self-aligning rod coupler FK, CRFK	To compensate for radial and angular deviations	■	■	■	■	■	49
[29]	Rod clevis SG/CRSG	Permits a swivelling movement of the cylinder in one plane	■	■	■	■	■	49
[30]	Coupling piece KSG	To compensate for radial deviations	■	■	■	■	■	49
	Coupling piece KSZ	For cylinders with a non-rotating piston rod to compensate for radial deviations	■	■	■	■	■	49
[31] [33]	Rod eye SGS/CRSGS	With spherical bearing	■	■	■	■	■	49
[32]	Rod clevis SGA	With male thread	■	■	■	■	■	49
[34]	Right-angle clevis foot LQG	–	■	■	■	■	■	48
–	Slot cover ABP-5-S	For protecting the sensor cables and the sensor slots from contamination	■	■	■	■	■	62

Type codes

001	Series	
DSBC	Standards-based cylinder, double-acting, based on ISO 15552	

002	Protection against rotation	
	None	
Q	With protection against rotation	

003	Running characteristics	
	Standard	
L	Low friction	
U	Uniform, slow movement	
L1	Low friction for balancer applications	

004	Piston diameter [mm]	
32	32	
40	40	
50	50	
63	63	
80	80	
100	100	
125	125	

005	Stroke [mm]	
20	20	
25	25	
30	30	
40	40	
50	50	
60	60	
70	70	
80	80	
100	100	
125	125	
150	150	
160	160	
200	200	
250	250	
300	300	
320	320	
400	400	
500	500	
...	1 ... 2800	

006	Clamping unit	
	None	
C	Attached	

007	End-position locking	
	None	
E1	Both sides	
E2	With advanced piston rod	
E3	With retracted piston rod	

008	Piston rod type	
	At one end	
T	Through piston rod	

009	Piston rod thread type	
	Male thread	
F	Female thread	

010	Profile type	
D3	Sensor slots on 3 profile sides	
	Sensor slot on one profile side only	

011	Cushioning	
P	Elastic cushioning rings/plates on both sides	
PPS	Pneumatic cushioning, self-adjusting at both ends	
PPV	Pneumatic cushioning, adjustable at both ends	

012	Position sensing	
A	For proximity sensor	

013	Corrosion protection	
	Standard	
R3	High corrosion protection	

014	Temperature range	
	Standard	
T1	Heat-resistant seals max. 120°C	
T3	-40 ... +80°C	
T4	0 ... +150°C	

015	Protection against particles	
	Standard	
P2	Bellows on bearing cap	

016	Scraper variant	
	None	
A1	Increased chemical resistance	
A2	Hard scraper	
A3	For unlubricated operation	
A6	Metal scraper	

017	Special material properties	
	None	
F1A	Recommended for production facilities for the manufacture of lithium-ion batteries	

018	EU certification	
	None	
EX4	II 2GD	

019	Piston rod extension	
	None	
...E	1 ... 500 mm	

020	Piston rod thread extension	
	None	
...L	0 ... 70 mm	

Datasheet

Function
cushioning P

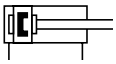

Adjustable pneumatic cushioning PPV

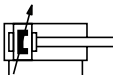

PPS cushioning

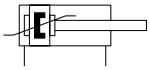

Diameter
32 ... 125 mm

Stroke length
1 ... 2800 mm

www.festo.com

Reparair service
ø 125 mm

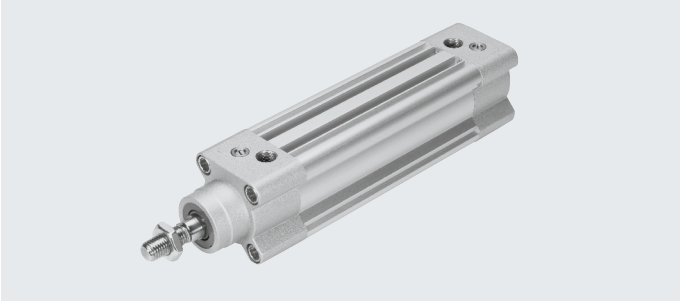

General technical data								
Piston ø		32	40	50	63	80	100	125
Design		Piston / piston rod / profile barrel						
Operating mode		Double-acting						
Pneumatic port		G1/8	G1/4	G1/4	G3/8	G3/8	G1/2	G1/2
Piston rod thread		M10x1.25	M12x1.25	M16x1.5	M16x1.5	M20x1.5	M20x1.5	M27x2
Stroke								
DSBC-...	[mm]	1 ... 2800						
DSBC-...-Q	[mm]	1 ... 1500						–
DSBC-...-L1	[mm]	10 ... 1000						
DSBC-...-C	[mm]	10 ... 2000						
DSBC-...-E1/-E2/-E3	[mm]	10 ... 2000						–
DSBC-...-P2	[mm]	10 ... 500						–
DSBC-...-KE	[mm]	1 ... 1500						
DSBC-...-...E	[mm]	1 ... 2000						
DSBC-...-...L	[mm]	1 ... 2000						
Cushioning								
DSBC-...-P		Elastic cushioning rings/plates at both ends						
DSBC-...-PPV		Pneumatic cushioning, adjustable at both ends						
DSBC-...-PPS		Pneumatic cushioning, self-adjusting at both ends						
Cushioning length								
DSBC-...-PPV	[mm]	17	19	22	22	31	31	45
DSBC-...-E1/-E2/-E3	[mm]	17	19	15	15	15	15	–
Position sensing		Via proximity switch						
Type of mounting		With female thread/accessories						
Mounting position		Any						

Datasheet

Operating and environmental conditions								
Piston ø		32	40	50	63	80	100	125
Operating medium		Compressed air to ISO 8573-1:2010 [7:4:4]						
Note on the operating/pilot medium		Lubricated operation possible (in which case lubricated operation will always be required)						
Operating pressure								
DSBC-...	[MPa]	0.06 ... 1.2		0.04 ... 1.2				0.02 ... 1.0
	[bar]	0.6 ... 12		0.4 ... 12				0.2 ... 10
DSBC-...-Q	[MPa]	0.1 ... 1.2						–
	[bar]	1 ... 12						–
DSBC-...-Q-C	[MPa]	0.15 ... 1.0						–
	[bar]	1.5 ... 10						–
DSBC-...-Q-T1	[MPa]	0.1 ... 0.8						–
	[bar]	1 ... 8						–
DSBC-...-L[1]	[MPa]	0.03 ... 1.2	0.025 ... 1.2			0.02 ... 1.2	0.015 ... 1.2	–
	[bar]	0.3 ... 12	0.25 ... 12			0.2 ... 12	0.15 ... 12	–
DSBC-...-U[1]	[MPa]	0.025 ... 1.2		0.02 ... 1.2	0.015 ... 1.2	0.01 ... 1.2		0.01 ... 1.0
	[bar]	0.25 ... 12		0.2 ... 12	0.15 ... 12	0.1 ... 12		0.1 ... 10
DSBC-...-L1[1]	[MPa]	0.03 ... 1.2	0.025 ... 1.2			0.02 ... 1.2	0.015 ... 1.2	0.01 ... 1.0
	[bar]	0.3 ... 12	0.25 ... 12			0.2 ... 12	0.15 ... 12	0.1 ... 10
DSBC-...-C[2]	[MPa]	0.15 ... 1.0						
	[bar]	1.5 ... 10						
DSBC-...-E1/-E2/-E3	[MPa]	0.25 ... 1.2		0.15 ... 1.2				–
	[bar]	2.5 ... 12		1.5 ... 12				–
DSBC-...-T[3]/-KE[3]/-T3/-A2	[MPa]	0.1 ... 1.2						0.1 ... 1.0
	[bar]	1 ... 12						1 ... 10
DSBC-...-T3-A6	[MPa]	0.15 ... 1.2						
	[bar]	1.5 ... 12						
DSBC-...-A3	[MPa]	0.15 ... 1.2		0.1 ... 1.2	0.06 ... 1.2			0.06 ... 1.0
	[bar]	1.5 ... 12		1 ... 12	0.6 ... 12			0.6 ... 10
DSBC-...-A6	[MPa]	0.15 ... 1.2						
	[bar]	1.5 ... 12						
DSBC-...-D3	[MPa]	0.08 ... 1.2	0.06 ... 1.2		0.04 ... 1.2			0.02 ... 1.0
	[bar]	0.8 ... 12	0.6 ... 12		0.4 ... 12			0.2 ... 10
Ambient temperature4)								
DSBC-...	[°C]	–20 ... +80						
DSBC-...-L/-U	[°C]	+5 ... +80						
DSBC-...-L1	[°C]	0 ... +60						
DSBC-...-A1	[°C]	0 ... +80						
DSBC-...-A6/-F1A/-KE	[°C]	–20 ... +80						
DSBC-...-T1-A6	[°C]	0 ... +120						
DSBC-...-T3-A6	[°C]	–40 ... +80						
DSBC-...-T4-A6	[°C]	0 ... +150						
DSBC-...-C	[°C]	–10 ... +80						
DSBC-...-T1	[°C]	0 ... +120						
DSBC-...-T3	[°C]	–40 ... +80						
DSBC-...-T4	[°C]	0 ... +150						
DSBC-...-P2	[°C]	–10 ... +80						–
DSBC-...-EX4	[°C]	–20 ... +60						
Corrosion resistance class CRC[5]								
DSBC-...		2 - Moderate corrosion stress						
DSBC-...-R3		3 - High corrosion stress						

1) Values apply only for strokes š 500 mm and after 10 double strokes.
In combination with cushioning PPV/PPS, the specifications only apply outside the cushioning range.
2) Note min. release pressure → page 19
3) With variant T (through piston rod) or variant KE (stroke adjustment), the minimum operating pressure may increase slightly after an idle period of > 24 hours.
4) Note operating range of proximity switches.
5) More information www.festo.com/x/topic/crc

Datasheet

Weight [g]							
Piston Ø	32	40	50	63	80	100	125
DSBC-...							
Product weight with 0 mm stroke	465	740	1190	1740	2660	3665	6611
Additional weight per 10 mm stroke	27	37	56	62	92	101	151
Moving mass per 0 mm stroke	110	205	365	430	810	1000	2245
Moving mass per 10 mm stroke	9	16	25	25	39	39	63
DSBC-...-Q							
Product weight with 0 mm stroke	503	755	1241	1821	2717	3827	–
Additional weight per 10 mm stroke	26	32	51	57	85	94	–
Moving mass per 0 mm stroke	103	170	332	391	757	890	–
Moving mass per 10 mm stroke	8	11	20	20	32	32	–
DSBC-...-L1							
Product weight with 0 mm stroke	465	741	1200	1759	2651	3693	6651
Additional weight per 10 mm stroke	27	37	56	62	92	101	151
Moving mass per 0 mm stroke	110	206	375	449	801	1028	2285
Moving mass per 10 mm stroke	9	16	25	25	39	39	63
DSBC-...-C							
Product weight with 0 mm stroke	745	1175	1940	2920	5075	6965	12860
Additional weight per 10 mm stroke	25	35	56	62	95	103	151
Moving mass per 0 mm stroke	160	290	540	620	1200	1425	3035
Moving mass per 10 mm stroke	9	16	25	25	39	39	63
DSBC-...-E1/-E2/-E3							
Product weight with 0 mm stroke							
DSBC-...-E1	505	780	1312	1862	3018	4023	–
DSBC-...-E2	485	760	1251	1801	2839	3844	–
DSBC-...-E3	485	760	1251	1801	2839	3844	–
Additional weight per 10 mm stroke	27	37	56	62	92	101	–
Moving mass per 0 mm stroke	110	205	365	430	810	1000	–
Moving mass per 10 mm stroke	9	16	25	25	39	39	–
DSBC-...-T							
Product weight with 0 mm stroke	581	924	1523	2103	3243	4353	7450
Additional weight per 10 mm stroke	34	53	81	87	131	140	214
Moving mass per 0 mm stroke	181	339	613	684	1292	1516	3084
Moving mass per 10 mm stroke	18	32	50	50	78	78	126
DSBC-...-KE							
Product weight with 0 mm stroke							
DSBC-...-25KE	650	1030	1724	2344	3504	4614	8006
DSBC-...-50KE	–	1111	1803	2383	3605	4715	8163
Additional weight per 10 mm stroke	36	53	81	87	131	140	214
Moving mass per 0 mm stroke							
DSBC-...-25KE	250	445	814	885	1553	1777	3640
DSBC-...-50KE	–	526	893	964	1654	1878	3797
Moving mass per 10 mm stroke	18	32	50	50	78	78	126
DSBC-...-F							
Product weight with 0 mm stroke	453	721	1145	1695	2570	3575	6391
Additional weight per 10 mm stroke	27	37	56	62	92	101	151
Moving mass per 0 mm stroke	98	186	320	385	720	910	2023
Moving mass per 10 mm stroke	9	16	25	25	39	39	63
DSBC-...-D3							
Product weight with 0 mm stroke	480	768	1216	1774	2720	3728	6768
Additional weight per 10 mm stroke	31	49	78	92	143	165	247
Moving mass per 0 mm stroke	110	205	365	430	810	1000	2245
Moving mass per 10 mm stroke	9	16	25	25	39	39	63

Datasheet

Weight [g]							
Piston Ø	32	40	50	63	80	100	125
DSBC-...E							
Additional weight per piston rod extension of 10 mm	9	16	25	25	39	39	63
DSBC-...L							
Additional weight per piston rod extension of 10 mm	6	8	14	14	22	22	41

ATEX[1]	
ATEX category for gas	II 2G
Type of (ignition) protection for gas	Ex h IIC T4 Gb
ATEX category for dust	II 2D
Type of ignition protection for dust	Ex h IIIC T120°C Db
Explosion-proof ambient temperature	–20°C ≤ Ta ≤ +60°C
CE marking (see declaration of conformity)	To EU Explosion Protection Directive (ATEX)
UKCA marking (see declaration of conformity)	To UK explosion regulations
Explosion protection certification outside the EU	EPL Gb (GB)
	EPL Db (GB)

1) Note the ATEX certification of the accessories.

Datasheet

Forces [N] and impact energy [J]							
Piston Ø	32	40	50	63	80	100	125
Theoretical force at 6 bar, advancing	483	754	1178	1870	3016	4712	7363
Theoretical force at 6 bar, retracting	415	633	990	1682	2721	4418	6881
Max. impact energy in the end positions							
DSBC-...	0.4[1)]	0.7	1.0	1.3	1.8	2.5	3.3
DSBC-...-L/-U/-T1/-T3/-T4	0.2[1)]	0.35	0.5	0.65	0.9	1.25	1.65
DSBC-...-L1	0.1	0.2	0.3	0.4	0.9	1.25	1.65
DSBC-...-KE	0.32[1)]	0.56	0.8	1	1.4	2	2.6

1) The max. energy in combination with the trunnion mounting kit DAMT is 0.1 J.

Permissible impact velocity: $V = \sqrt{\frac{2 \times E}{m_1 + m_2}}$

Maximum permissible mass: $m_2 = \frac{2 \times E}{v^2} - m_1$

V	Perm. impact velocity
E	max. impact energy
m1	Moving mass (drive)
m2	Moving payload

Max. lateral force Fq as a function of stroke length l

Horizontal installation

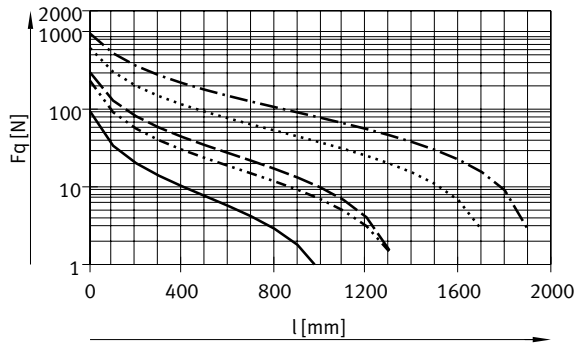

Vertical installation

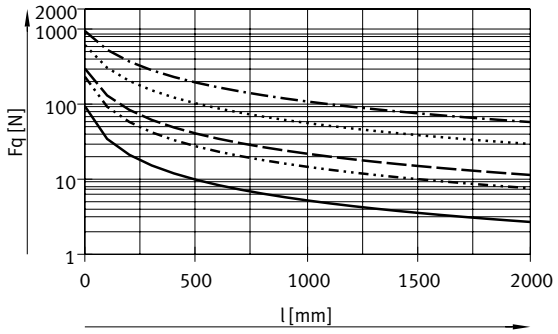

- Ø 32
- Ø 40
- Ø 50/63
- Ø 80/100
- Ø 125

Note

No transverse forces are permitted in combination with feature DSBC-...-L1.

Permissible torsional backlash for variant Q – with protection against rotation							
Piston Ø		32	40	50	63	80	100
Torsional backlash	[°]	±0.65	±0.6	±0.45	±0.45	±0.45	±0.45

Datasheet

Max. lateral force Fq as a function of stroke length l and lever arm s

Q – With protection against rotation

Ø 32

Max. torque = 800 Nmm/max. stroke = 300 mm

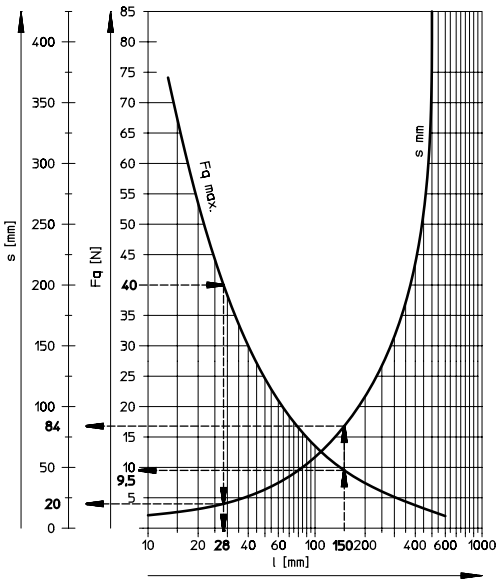

Ø 40

Max. torque = 1100 Nmm/max. stroke = 400 mm

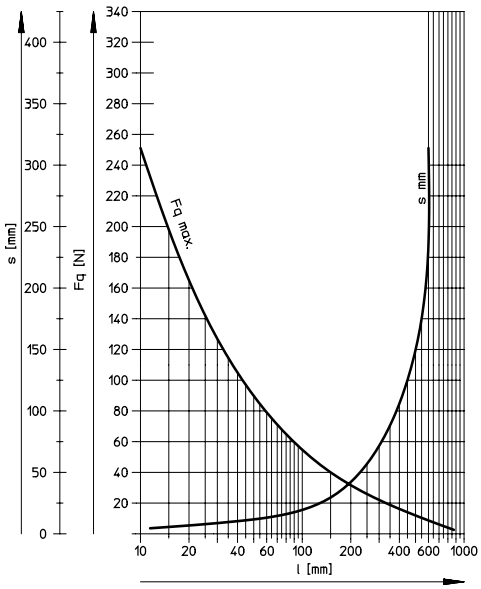

Examples for piston Ø 32 mm

Example 1:
Stroke length l = 150 mm
Result: permissible
Lateral force Fq = 9.5 N
Lever arm s = 84 mm

Example 2:
Lateral force Fq = 40 N
Result: permissible
Stroke length l = 28 mm
Lever arm s = 20 mm

Example 3:
Stroke length l = 150 mm
Lever arm s = 100 mm

$$F_q = \frac{M}{s} = \frac{800\ Nmm}{100\ mm}$$

M = max. torque
s = lever arm

Result: permissible
Fq = 8 N ‹ $Fq_{max.}$ = 9.5 N

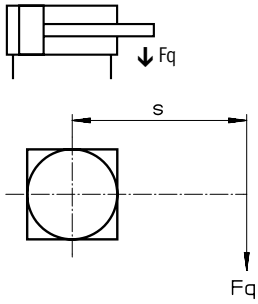

Datasheet

Max. lateral force Fq as a function of stroke length l and lever arm s

Q – With protection against rotation

Ø 5 0/63

Max. torque = 1500 Nmm/max. stroke = 500 mm

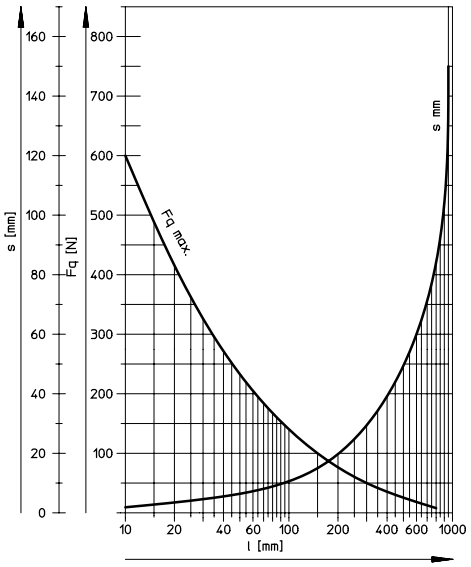

Ø 8 0/100

Max. torque = 3000 Nmm/max. stroke = 600 mm

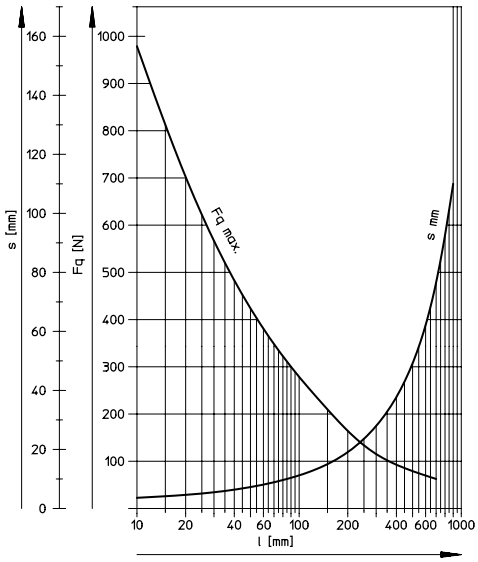

Datasheet

Materials

Sectional view – Basic design

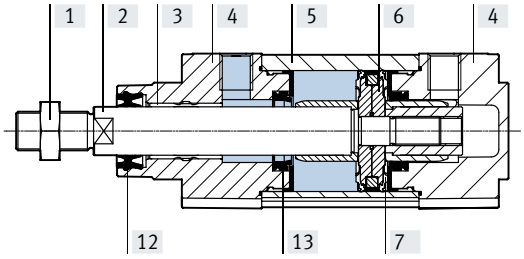

With clamping unit

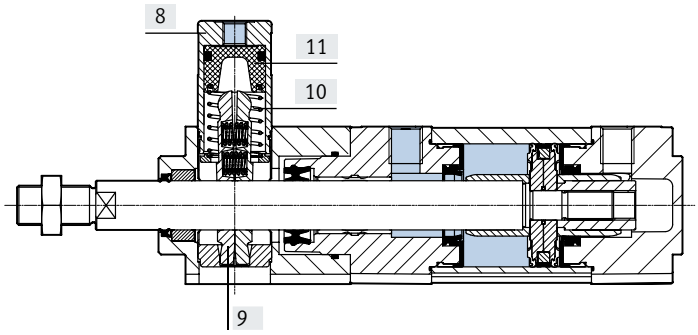

With end-position locking

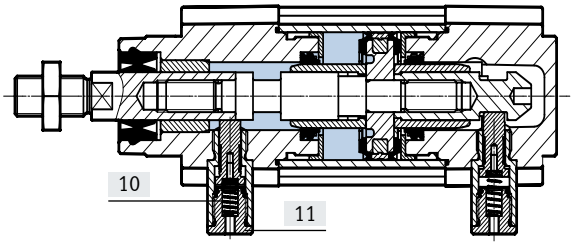

Standards-based cylinder		
[1]	Nut	
	DSBC-...	Galvanised steel
	DSBC-...-R3	High-alloy stainless steel
	DSBC-...-F1A	Steel, chemically nickel-plated
[2]	Piston rod	
	DSBC-...	High-alloy steel
	DSBC-...-R3	High-alloy stainless steel
	DSBC-...-A2/-A6/-T3-A6/-T4-A6	Hard-chrome-plated tempered steel
	DSBC-...-T1-A6	High-alloy stainless steel, hard chrome-plated
[3]	Bearings	
	DSBC-...	POM
	DSBC-...-E1/-E2/-E3/-SL/-EX4/-A2/-Q/-Q-T1	Bronze
	DSBC-...-L/-U/-T1/-T1-A1/-T1-A6/-T4-A6/-D3	Metal polymer compound
[4]	Cover	Coated die-cast aluminum
[5]	Profile barrel	Anodised wrought aluminium alloy
[6]	Cushioning boss	
	DSBC-...	POM
	DSBC-...-L/-T1/-T1-A1/-T1-A6	Metal polymer compound
	DSBC-...-T4/-T4-A6	Anodised wrought aluminium alloy
[7]	Piston seal	
	DSBC-...	TPE-U(PU)
	DSBC-...-L/-U/-T1/-T4	FPM
	DSBC-...-T3	TPE-U (PU) (suitable for low temperatures)
	DSBC-...-L1	HNBR
[8]	Housing, clamping unit	Anodised wrought aluminium alloy
[9]	Clamping jaws, clamping unit	Brass
[10]	Spring	
	DSBC-...-C	Spring steel
	DSBC-...-E1/E2/E3	High-alloy stainless steel
[11]	Piston	
	DSBC-...-C	POM
	DSBC-...-E1/E2/E3	Hardened steel

Datasheet

Standards-based cylinder		
[12]	Piston rod scraper	
	DSBC-...	TPE-U(PU)
	DSBC-...-L/-U	FPM
	DSBC-...-L1	HNBR
	DSBC-...-T1/-T4/-A1	FPM
	DSBC-...-T3	TPE-U(PU)
	DSBC-...-T4-A6	Brass
	DSBC-...-A3	UHMW-PE
[13]	Buffer seal	
	DSBC-...	PUR
	DSBC-...-L	TPE-U(PU)
	DSBC-...-U/-T1/-T1-A1/-T1-A6/-Q-T1/-T4	FPM
	DSBC-...-T3	PUR (suitable for low temperatures)
–	Piston rod scraper	
	DSBC-...-A6/-T3-A6	CuZn
	DSBC-...-T3/-A2	PTFE-reinforced
	DSBC-...-T4-A6	Brass
	DSBC-...-D3	TPE-E
–	Stroke adjustment DSBC-...-KE	
	Stop element	PE-UHMW
	Threaded coupling	Aluminium
–	Housing, end-position locking	High-alloy steel
–	Flange screw	
	DSBC-...	Galvanised steel
	DSBC-...-F1A	Steel, chemically nickel-plated
–	Note on materials	
	DSBC-...	RoHs-compliant
	DSBC-...-F1A	Suitable for battery production with reduced Cu/Zn/Ni values (F1a)
	LABS (PWIS) conformity	
	DSBC-...	VDMA 24364-B1/B2-L
	DSBC-...-L/U/-T3/-T4/-A3	VDMA 24364-Zone III
	DSBC-...-F1A	VDMA 24364-C1-L
	Cleanroom class	
	DSBC-32 ... 50	Class 5 to ISO 14644-1

Datasheet

Technical data DBSC-...-E1/-E2/-E3 – With end-position locking

- End-position locking should only be used in conjunction with double-acting cylinders with exhaust air flow control in order to ensure that the lock is always completely released prior to starting the drive movement.
- The end-position locking may only be released if the forces at the piston have reached equilibrium. Otherwise, a sudden movement of the piston rod could cause accidents. Blocking off the compressed air supply at both ends (e.g. with a 5/3-way valve) does not provide any safety.
- The piston rod can be locked in any stroke position once the drive is brought mechanically into its end position.
- A very tightly set end-position cushioning (more than 50% closed) can result in the locking bolt not engaging reliably, resulting in premature wear.
- The exhaust bore must not be closed.

Piston ⌀		32	40	50	63	80	100
Operating mode of end-position locking		Positive locking with stop cylinder					
		Release through compressed air					
Static holding force	[N]	500	500	2000	2000	5000	5000
Max. axial backlash with end position locked	[mm]	1.3	1.3	1.3	1.5	1.5	1.5
Min. unlocking pressure	[MPa]	š 0.25		š 0.15			
	[bar]	š 2.5		š1.5			
Max. locking pressure	[MPa]	≥ 0.05					
	[bar]	≥ 0.5					

Sizing example

When sizing pneumatic cylinders it is recommended as a basic principle that only 50% of the indicated theoretical forces (see above) be used.

Where:
Mounting position = vertical
Workpiece load = 44 kg
F = m x g = 44 kg x 9.81 m/s^2
= 431.6 N

To be determined:
Suitable piston diameter

Example with piston diameter 32 mm:
Theoretical force at 6 bar, advancing = 483 N
50% of the theoretical force = 241.5 N
Static holding force with piston diameter 32 mm = 500 N
The static holding force of end-position locking is within the permissible range (max. 500 N) for a workpiece load of 44 kg (431.6 N); however, the cylinder would be at 89% capacity.
Results:
A cylinder with a piston diameter of 50 mm is therefore recommended for this application.

Datasheet

Technical data DSBC-...C – with clamping unit

- The specified holding force refers to a static load. If this value is exceeded, the piston rod may slip. Dynamic forces occurring during operation must not exceed the static holding force. The clamping unit is not backlash-free in the clamped condition if varying loads are applied to the piston rod.
- The clamping unit may only be released if the forces at the piston have reached equilibrium. Otherwise, a sudden movement of the piston rod could cause accidents. Blocking off the compressed air supply at both ends (e.g. with a 5/3-way valve) does not provide any safety.

Piston ⌀		32	40	50	63	80	100	125
Mode of operation clamping unit		At both ends						
		Clamping through spring force						
		Release through compressed air						
Static holding force	[N]	600	1000	1400	2000	5000	5000	7500
Max. axial play under load	[mm]	0.5	0.5	0.8	0.8	0.8	0.8	1.8
Min. release pressure	[MPa]	0.3						
	[bar]	3						

Datasheet

Dimensions Download CAD data ➔ www.festo.com

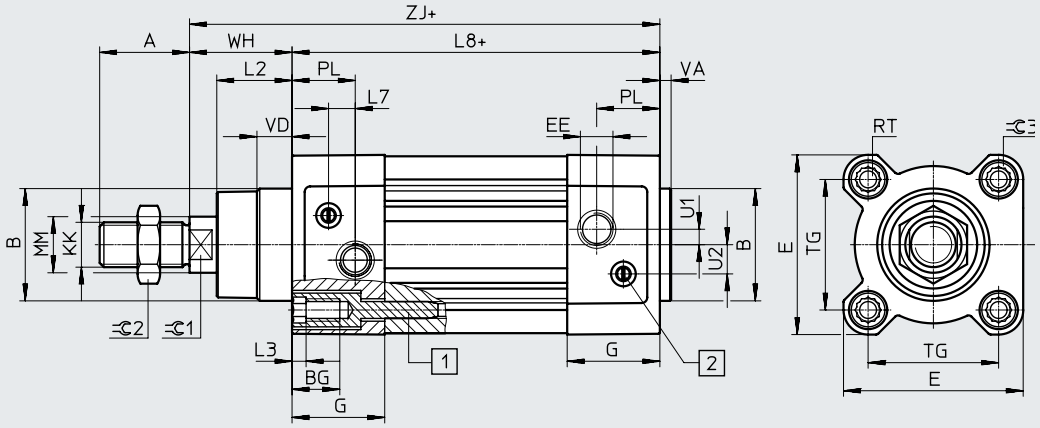

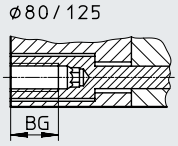

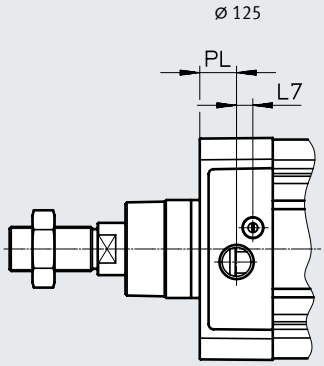

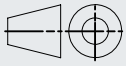

+ = plus stroke length
[1] Socket head screw with female thread for mounting components
[2] Adjusting screw for adjustable end-position cushioning
[3] Sensor slot for proximity switch

Dimensions – Variants Download CAD data ➔ www.festo.com

T – Through piston rod

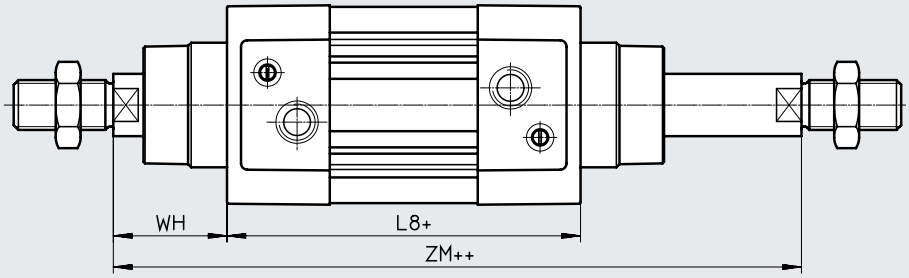

+ = plus stroke length
++ = plus 2x stroke length

Datasheet

KE – Stroke adjustment

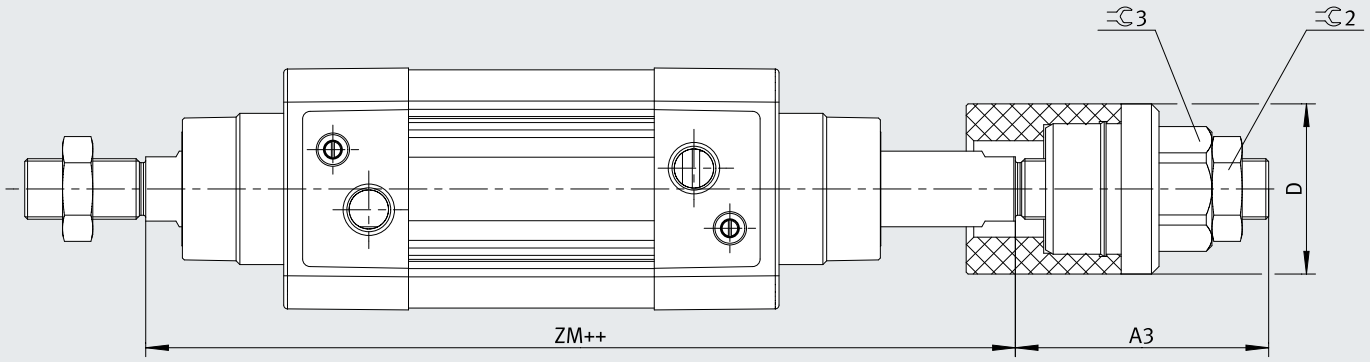

\+ = plus stroke length
++ = plus 2x stroke length

ø [mm]	A –0.5	A3 DSBC-...-25KE	A3 DSBC-...-50KE	B ø d11	BG min.	D ø	E +0.5	EE	G –0.2	U2) ±0.1
32	22	52	–	30	16	30	45	G1/8	28	5.7
40	24	56	81	35	16	35	54	G1/4	33	8
50	32	67	92	40	16	45	64	G1/4	33	10.4
63	32	67	92	45	16	45	75	G3/8	40.5	12.75
80	40	73	98	45	17	45	93	G3/8	43	12.5
100	40	73	98	55	17	45	110	G1/2	48	13.5
125	54	89	114	60	20	60	136	G1/2	44.7	13

ø [mm]	U1 ±0.1	KK	L2	L3 max.	L7	L8 ±0.4	MM ø	PL ±0.1	RT	TG ±0.3
32	5.25	M10x1.25	$18_{-0.2}$	5	6.5	94	12	19.5	M6	32.5
40	4	M12x1.25	$21.3_{-0.2}$	5	7.5	105	16	22.5	M6	38
50	5.5	M16x1.5	$26.8_{-0.2}$	5	9.5	106	20	22.5	M8	46.5
63	6.25	M16x1.5	$27_{-0.2}$	5	9	121	20	27.5	M8	56.5
80	8	M20x1.5	$34.2_{-0.2}$	–	11	128	25	30	M10	72
100	10	M20x1.5	$38_{-0.2}$	–	7.5	138	25	31.5	M10	89
125	8	M27x2	$45.5_{-0.3}$	–	10	160	32	22.5	M12	110

ø [mm]	VA	VD +0.5	WH +2.2	ZJ +1.8	ZM +1	=C1	=C2	=C3 DSBC-...	=C3 DSBC-...-KE	=C4
32	$4_{-0.2}$	10	25	119.1	146.1	10	17	6	17	24
40	$4_{-0.2}$	10.5	28.7	133.9	164.8	13	19	6	19	30
50	$4_{-0.2}$	11.5	35.6	141.8	179.8	17	24	8	24	30
63	$4_{-0.2}$	15	35.9	157.1	195.4	17	24	8	24	30
80	$4_{-0.2}$	15.7	45.4	173.6	221	22	30	6	30	36
100	$4_{-0.2}$	19.2	49.3	187.5	238.8	22	30	6	30	36
125	$6_{-0.3}$	20.5	64.1	225	290	27	41	8	41	41

Datasheet

Dimensions – Variants

Download CAD data ➔ www.festo.com

Q – With protection against rotation

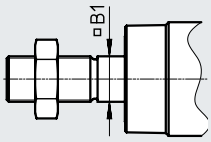

Note

In combination with variant T, the piston rod is protected against rotation at one end.

F – Female thread

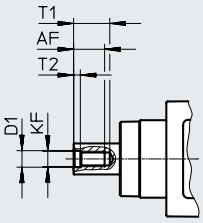

Note

In combination with variant T, the piston rod has female threads at both ends.

...E – Extended piston rod

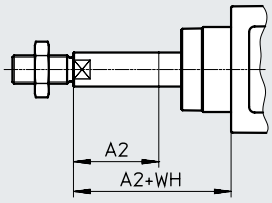

Note

In combination with variant T, the piston rod is extended at one end.
In combination with variants T and Q, the piston rod is extended only at the square piston rod

...L – Extended piston rod thread

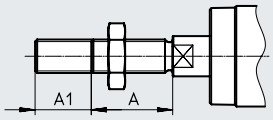

Note

In combination with variant T, the piston rod thread is extended at both ends.

D3 – Sensor slot on 3 sides

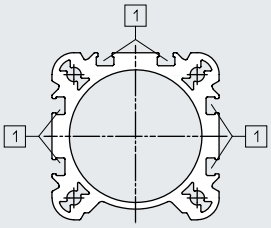

[1] Sensor slot for proximity switch

Datasheet

ø	A	A1		A2		AF
[mm]		min.	max.	min.	max.	min.
32	22	1	35	1	500	12
40	24	1	35	1	500	12
50	32	1	70	1	500	16
63	32	1	70	1	500	16
80	40	1	70	1	500	20
100	40	1	70	1	500	20
125	54	1	70	1	500	32

ø	B1	D1	KF	T1	T2	WH
[mm]				max.		+2.2
32	10	6.4	M6	16	2.6	25
40	12	8.4	M8	16	3.3	28.7
50	16	10.5	M10	21	4.7	35.6
63	16	10.5	M10	21	4.7	35.9
80	20	13	M12	26.5	6.1	45.4
100	20	13	M12	26.5	6.1	49.3
125	–	17	M16	40	8	64.1

Datasheet

Dimensions – Variants Download CAD data ➔ www.festo.com

C – Clamping unit

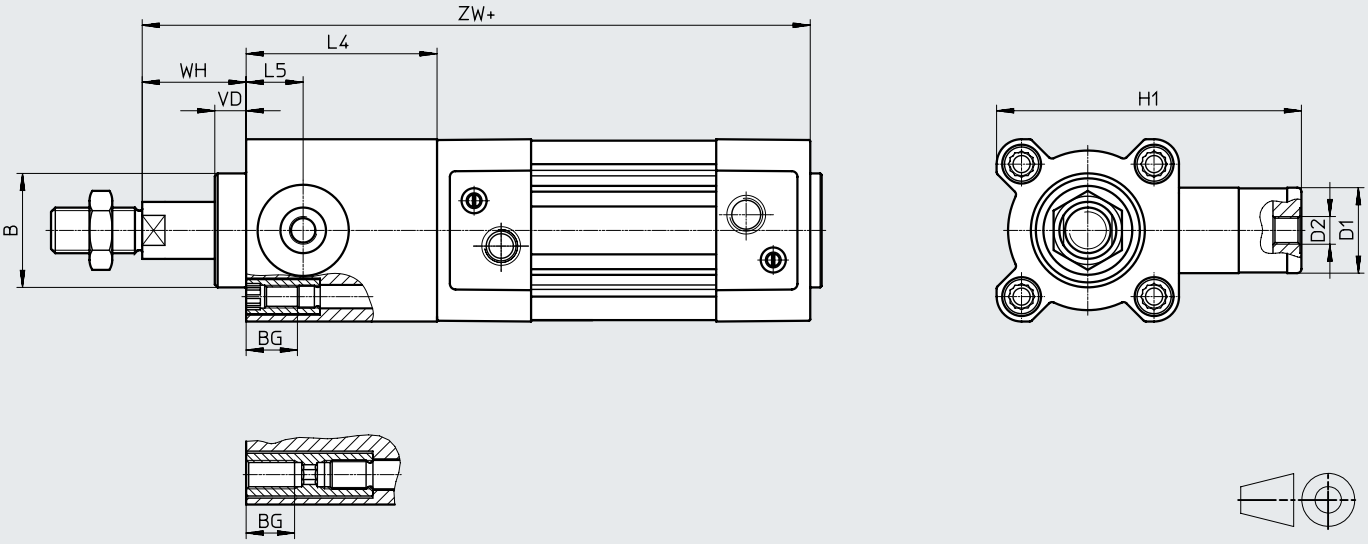

Note

The clamping unit can only be selected with variant T in conjunction with variant Q.

The clamping unit is mounted on the round piston rod end in combination with variants T and Q.

+ = plus stroke length

ø [mm]	B ø d11	BG	D1	D2	H1	L4 ±0.2	L5	VD	WH	ZW ±1.8
32	30	16	20	M5	67	45	14	11.5	26	164.1
40	35	16	24	G1/8	88	53	16	11.5	30	186.9
50	40	16	30	G1/8	107	67	20	11	37	208.8
63	45	16	38	G1/8	123	76	24	11	37	233.1
80	45	17	48	G1/8	165	95	31.5	12.5	46	268.6
100	55	17	48	G1/8	174	98	31	12	51	285.7
125	60	20	65	G1/8	208	125	42	27.5	65	349.3

Datasheet

Dimensions – Variants

Download CAD data ➔ www.festo.com

E1/E2/E3 – End-position locking

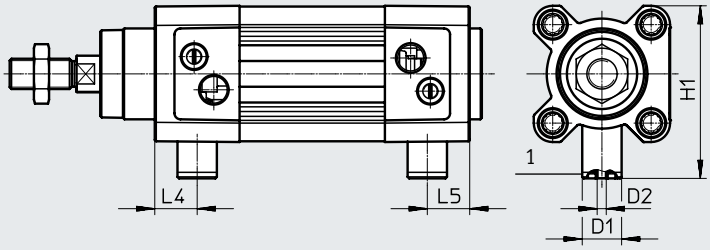

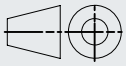

Note

[1] The connection is used for the manual locking and/or ducted exhaust air. It must not be sealed or pressurised.

E1 - End-position locking at both ends

Ø [mm]	D1 Ø	D2	H1	L4	L5
32	13	M3	57.5	14	14
40	13	M3	64	17	17
50	20	M5	78.5	18	18
63	20	M5	84.5	25	25
80	30	M5	105	22	22
100	30	M5	113.5	25.5	25.5

E2 – End-position locking with advanced piston rod

Ø [mm]	D1 Ø	D2	H1	L4
32	13	M3	57.5	14
40	13	M3	64	17
50	20	M5	78.5	18
63	20	M5	84.5	25
80	30	M5	105	22
100	30	M5	113.5	25.5

E3 – End-position locking with retracted piston rod

Ø [mm]	D1 Ø	D2	H1	L5
32	13	M3	57.5	14
40	13	M3	64	17
50	20	M5	78.5	18
63	20	M5	84.5	25
80	30	M5	105	22
100	30	M5	113.5	25.5

Datasheet

Dimensions – Variants Download CAD data ➔ www.festo.com

P2 – Protective bellows on the bearing cap

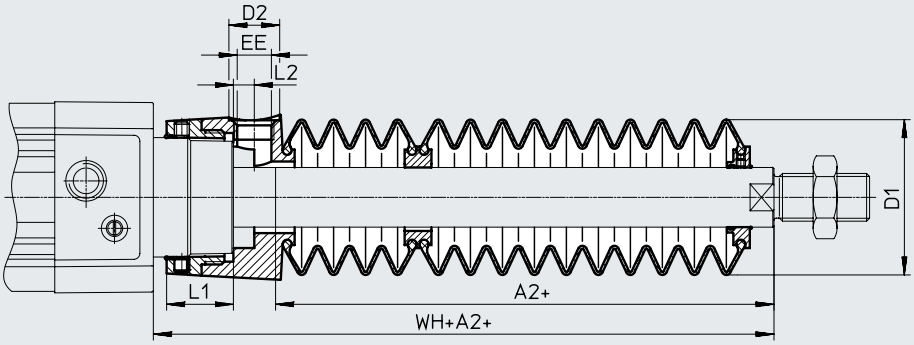

+ = plus stroke length

Datasheet

ø	32							40						
Stroke [mm]	A2[1)]	D1 max.	D2	EE	L1	L2	WH+A2	A2[1)]	D1 max.	D2	EE	L1	L2	WH+A2
10 ... 50	29	38	14	G1/8	12.9	5.4	55	28	46	14	G1/8	16.3	5.4	56.7
51 ... 125	47						73	43						71.7
126 ... 175	61						87	56						84.7
176 ... 250	80						106	72						100.7
251 ... 300	96						122	86						114.7
301 ... 350	112						138	100						128.7
351 ... 375	114						140	101						129.7
376 ... 425	130						156	115						143.7
426 ... 475	145						171	130						158.7
476 ... 500	147						173	131						159.7

ø	50							63						
Stroke [mm]	A2[1)]	D1 max.	D2	EE	L1	L2	WH+A2	A2[1)]	D1 max.	D2	EE	L1	L2	WH+A2
10 ... 50	28	57	17	G1/4	22.35	7	63.6	28	57	17	G1/4	22.4	7	63.9
51 ... 125	46						81.6	46						81.9
126 ... 175	56						91.6	56						91.9
176 ... 250	73						108.6	73						108.9
251 ... 300	86						121.6	86						121.9
301 ... 350	97						132.6	97						132.9
351 ... 375	105						140.6	105						140.9
376 ... 425	116						151.6	116						151.9
426 ... 475	126						161.6	126						161.9
476 ... 500	134						169.6	134						169.9

ø	80							100						
Stroke [mm]	A2[1)]	D1 max.	D2	EE	L1	L2	WH+A2	A2[1)]	D1 max.	D2	EE	L1	L2	WH+A2
10 ... 50	25	93	17	G1/4	28	4	70.4	25	93	17	G1/4	28	4	74.3
51 ... 125	37						82.4	37						86.3
126 ... 175	49						94.4	49						98.3
176 ... 250	62						107.4	62						111.3
251 ... 300	74						119.4	74						123.3
301 ... 350	86						131.4	86						135.3
351 ... 375	87						132.4	87						136.3
376 ... 425	98						143.4	98						147.3
426 ... 475	110						155.4	110						159.3
476 ... 500	111						156.4	111						160.3

1) The dimension corresponds to the E value (piston rod extension) of the drive

Datasheet

Ordering data					
Piston Ø [mm]	Stroke [mm]	With PPV cushioning Part no.	Type	With PPS cushioning Part no.	Type
32	20	2123069	DSBC-32-20-PPVA-N3	2123085	DSBC-32-20-PPSA-N3
	25	1376422	DSBC-32-25-PPVA-N3	1376467	DSBC-32-25-PPSA-N3
	30	2123070	DSBC-32-30-PPVA-N3	2123086	DSBC-32-30-PPSA-N3
	40	1376423	DSBC-32-40-PPVA-N3	1376468	DSBC-32-40-PPSA-N3
	50	1376424	DSBC-32-50-PPVA-N3	1376469	DSBC-32-50-PPSA-N3
	60	2123071	DSBC-32-60-PPVA-N3	2123087	DSBC-32-60-PPSA-N3
	70	2123072	DSBC-32-70-PPVA-N3	2123088	DSBC-32-70-PPSA-N3
	80	1376425	DSBC-32-80-PPVA-N3	1376470	DSBC-32-80-PPSA-N3
	100	1376426	DSBC-32-100-PPVA-N3	1376471	DSBC-32-100-PPSA-N3
	125	1376427	DSBC-32-125-PPVA-N3	1376472	DSBC-32-125-PPSA-N3
	150	2123073	DSBC-32-150-PPVA-N3	2123089	DSBC-32-150-PPSA-N3
	160	1376428	DSBC-32-160-PPVA-N3	1376473	DSBC-32-160-PPSA-N3
	200	1376429	DSBC-32-200-PPVA-N3	1376474	DSBC-32-200-PPSA-N3
	250	1376430	DSBC-32-250-PPVA-N3	1376475	DSBC-32-250-PPSA-N3
	300	2123074	DSBC-32-300-PPVA-N3	2123090	DSBC-32-300-PPSA-N3
	320	1376431	DSBC-32-320-PPVA-N3	1376476	DSBC-32-320-PPSA-N3
	400	1376432	DSBC-32-400-PPVA-N3	1376477	DSBC-32-400-PPSA-N3
	500	1376433	DSBC-32-500-PPVA-N3	1376478	DSBC-32-500-PPSA-N3
	1 ... 2800	1463254	DSBC-32-...-PPVA-N3	1463252	DSBC-32-...-PPSA-N3
40	20	2123166	DSBC-40-20-PPVA-N3	2123780	DSBC-40-20-PPSA-N3
	25	1376656	DSBC-40-25-PPVA-N3	1376903	DSBC-40-25-PPSA-N3
	30	2123167	DSBC-40-30-PPVA-N3	2123781	DSBC-40-30-PPSA-N3
	40	1376657	DSBC-40-40-PPVA-N3	1376904	DSBC-40-40-PPSA-N3
	50	1376658	DSBC-40-50-PPVA-N3	1376905	DSBC-40-50-PPSA-N3
	60	2123224	DSBC-40-60-PPVA-N3	2123782	DSBC-40-60-PPSA-N3
	70	2123225	DSBC-40-70-PPVA-N3	2123783	DSBC-40-70-PPSA-N3
	80	1376659	DSBC-40-80-PPVA-N3	1376906	DSBC-40-80-PPSA-N3
	100	1376660	DSBC-40-100-PPVA-N3	1376907	DSBC-40-100-PPSA-N3
	125	1376661	DSBC-40-125-PPVA-N3	1376908	DSBC-40-125-PPSA-N3
	150	2123226	DSBC-40-150-PPVA-N3	2123784	DSBC-40-150-PPSA-N3
	160	1376662	DSBC-40-160-PPVA-N3	1376909	DSBC-40-160-PPSA-N3
	200	1376663	DSBC-40-200-PPVA-N3	1376910	DSBC-40-200-PPSA-N3
	250	1376664	DSBC-40-250-PPVA-N3	1376911	DSBC-40-250-PPSA-N3
	300	2123227	DSBC-40-300-PPVA-N3	2123785	DSBC-40-300-PPSA-N3
	320	1376665	DSBC-40-320-PPVA-N3	1376912	DSBC-40-320-PPSA-N3
	400	1376666	DSBC-40-400-PPVA-N3	1376913	DSBC-40-400-PPSA-N3
	500	1376667	DSBC-40-500-PPVA-N3	1376914	DSBC-40-500-PPSA-N3
	1 ... 2800	1462834	DSBC-40-...-PPVA-N3	1462835	DSBC-40-...-PPSA-N3

Note

Other variants in the modular product system ➔ page 34

Datasheet

Ordering data					
Piston Ø	Stroke	With PPV cushioning		With PPS cushioning	
[mm]	[mm]	Part no.	Type	Part no.	Type
50	20	2098969	DSBC-50-20-PPVA-N3	2102628	DSBC-50-20-PPSA-N3
	25	1366948	DSBC-50-25-PPVA-N3	1376301	DSBC-50-25-PPSA-N3
	30	2098970	DSBC-50-30-PPVA-N3	2102629	DSBC-50-30-PPSA-N3
	40	1366949	DSBC-50-40-PPVA-N3	1376304	DSBC-50-40-PPSA-N3
	50	1366950	DSBC-50-50-PPVA-N3	1376305	DSBC-50-50-PPSA-N3
	60	2098972	DSBC-50-60-PPVA-N3	2102630	DSBC-50-60-PPSA-N3
	70	2098973	DSBC-50-70-PPVA-N3	2102631	DSBC-50-70-PPSA-N3
	80	1366951	DSBC-50-80-PPVA-N3	1376306	DSBC-50-80-PPSA-N3
	100	1366952	DSBC-50-100-PPVA-N3	1376307	DSBC-50-100-PPSA-N3
	125	1366953	DSBC-50-125-PPVA-N3	1376308	DSBC-50-125-PPSA-N3
	150	2098974	DSBC-50-150-PPVA-N3	2102632	DSBC-50-150-PPSA-N3
	160	1366954	DSBC-50-160-PPVA-N3	1376309	DSBC-50-160-PPSA-N3
	200	1366955	DSBC-50-200-PPVA-N3	1376310	DSBC-50-200-PPSA-N3
	250	1366956	DSBC-50-250-PPVA-N3	1376311	DSBC-50-250-PPSA-N3
	300	2098975	DSBC-50-300-PPVA-N3	2102633	DSBC-50-300-PPSA-N3
	320	1366957	DSBC-50-320-PPVA-N3	1376312	DSBC-50-320-PPSA-N3
	400	1366958	DSBC-50-400-PPVA-N3	1376313	DSBC-50-400-PPSA-N3
	500	1366959	DSBC-50-500-PPVA-N3	1376314	DSBC-50-500-PPSA-N3
	1 ... 2800	1463766	DSBC-50-...-PPVA-N3	1463768	DSBC-50-...-PPSA-N3
63	20	2125490	DSBC-63-20-PPVA-N3	2126684	DSBC-63-20-PPSA-N3
	25	1383578	DSBC-63-25-PPVA-N3	1383632	DSBC-63-25-PPSA-N3
	30	2125491	DSBC-63-30-PPVA-N3	2126685	DSBC-63-30-PPSA-N3
	40	1383579	DSBC-63-40-PPVA-N3	1383633	DSBC-63-40-PPSA-N3
	50	1383580	DSBC-63-50-PPVA-N3	1383634	DSBC-63-50-PPSA-N3
	60	2125492	DSBC-63-60-PPVA-N3	2126686	DSBC-63-60-PPSA-N3
	70	2125493	DSBC-63-70-PPVA-N3	2126687	DSBC-63-70-PPSA-N3
	80	1383581	DSBC-63-80-PPVA-N3	1383635	DSBC-63-80-PPSA-N3
	100	1383582	DSBC-63-100-PPVA-N3	1383636	DSBC-63-100-PPSA-N3
	125	1383583	DSBC-63-125-PPVA-N3	1383637	DSBC-63-125-PPSA-N3
	150	2125494	DSBC-63-150-PPVA-N3	2126688	DSBC-63-150-PPSA-N3
	160	1383584	DSBC-63-160-PPVA-N3	1383638	DSBC-63-160-PPSA-N3
	200	1383585	DSBC-63-200-PPVA-N3	1383639	DSBC-63-200-PPSA-N3
	250	1383586	DSBC-63-250-PPVA-N3	1383640	DSBC-63-250-PPSA-N3
	300	2125495	DSBC-63-300-PPVA-N3	2126689	DSBC-63-300-PPSA-N3
	320	1383587	DSBC-63-320-PPVA-N3	1383641	DSBC-63-320-PPSA-N3
	400	1383588	DSBC-63-400-PPVA-N3	1383642	DSBC-63-400-PPSA-N3
	500	1383589	DSBC-63-500-PPVA-N3	1383643	DSBC-63-500-PPSA-N3
	1 ... 2800	1463483	DSBC-63-...-PPVA-N3	1463481	DSBC-63-...-PPSA-N3

Note

Other variants in the modular product system ➔ page 34

Datasheet

Ordering data					
Piston Ø	Stroke	With PPV cushioning		With PPS cushioning	
[mm]	[mm]	Part no.	Type	Part no.	Type
80	20	2126594	DSBC-80-20-PPVA-N3	2126636	DSBC-80-20-PPSA-N3
	25	1383333	DSBC-80-25-PPVA-N3	1383366	DSBC-80-25-PPSA-N3
	30	2126595	DSBC-80-30-PPVA-N3	2126637	DSBC-80-30-PPSA-N3
	40	1383334	DSBC-80-40-PPVA-N3	1383367	DSBC-80-40-PPSA-N3
	50	1383335	DSBC-80-50-PPVA-N3	1383368	DSBC-80-50-PPSA-N3
	60	2126597	DSBC-80-60-PPVA-N3	2126638	DSBC-80-60-PPSA-N3
	70	2126598	DSBC-80-70-PPVA-N3	2126639	DSBC-80-70-PPSA-N3
	80	1383336	DSBC-80-80-PPVA-N3	1383369	DSBC-80-80-PPSA-N3
	100	1383337	DSBC-80-100-PPVA-N3	1383370	DSBC-80-100-PPSA-N3
	125	1383338	DSBC-80-125-PPVA-N3	1383371	DSBC-80-125-PPSA-N3
	150	2126599	DSBC-80-150-PPVA-N3	2126640	DSBC-80-150-PPSA-N3
	160	1383339	DSBC-80-160-PPVA-N3	1383372	DSBC-80-160-PPSA-N3
	200	1383340	DSBC-80-200-PPVA-N3	1383373	DSBC-80-200-PPSA-N3
	250	1383341	DSBC-80-250-PPVA-N3	1383374	DSBC-80-250-PPSA-N3
	300	2126600	DSBC-80-300-PPVA-N3	2126641	DSBC-80-300-PPSA-N3
	320	1383342	DSBC-80-320-PPVA-N3	1383375	DSBC-80-320-PPSA-N3
	400	1383343	DSBC-80-400-PPVA-N3	1383376	DSBC-80-400-PPSA-N3
	500	1383344	DSBC-80-500-PPVA-N3	1383377	DSBC-80-500-PPSA-N3
	1 ... 2800	1463504	DSBC-80-...-PPVA-N3	1463500	DSBC-80-...-PPSA-N3
100	25	1384804	DSBC-100-25-PPVA-N3	1384890	DSBC-100-25-PPSA-N3
	40	1384805	DSBC-100-40-PPVA-N3	1384891	DSBC-100-40-PPSA-N3
	50	1384806	DSBC-100-50-PPVA-N3	1384892	DSBC-100-50-PPSA-N3
	80	1384807	DSBC-100-80-PPVA-N3	1384893	DSBC-100-80-PPSA-N3
	100	1384808	DSBC-100-100-PPVA-N3	1384894	DSBC-100-100-PPSA-N3
	125	1384809	DSBC-100-125-PPVA-N3	1384895	DSBC-100-125-PPSA-N3
	160	1384810	DSBC-100-160-PPVA-N3	1384896	DSBC-100-160-PPSA-N3
	200	1384811	DSBC-100-200-PPVA-N3	1384897	DSBC-100-200-PPSA-N3
	250	1384812	DSBC-100-250-PPVA-N3	1384898	DSBC-100-250-PPSA-N3
	320	1384813	DSBC-100-320-PPVA-N3	1384899	DSBC-100-320-PPSA-N3
	400	1384814	DSBC-100-400-PPVA-N3	1384900	DSBC-100-400-PPSA-N3
	500	1384815	DSBC-100-500-PPVA-N3	1384901	DSBC-100-500-PPSA-N3
	1 ... 2800	1463598	DSBC-100-...-PPVA-N3	1463558	DSBC-100-...-PPSA-N3
125	25	1804956	DSBC-125-25-PPVA-N3	1804661	DSBC -125-25-PPSA-N3
	40	1804957	DSBC-125-40-PPVA-N3	1804662	DSBC-125-40-PPSA-N3
	50	1804958	DSBC-125-50-PPVA-N3	1804663	DSBC-125-50-PPSA-N3
	80	1804959	DSBC-125-80-PPVA-N3	1804664	DSBC-125-80-PPSA-N3
	100	1804960	DSBC-125-100-PPVA-N3	1804665	DSBC-125-100-PPSA-N3
	125	1804961	DSBC-125-125-PPVA-N3	1804666	DSBC-125-125-PPSA-N3
	160	1804962	DSBC-125-160-PPVA-N3	1804667	DSBC-125-160-PPSA-N3
	200	1804963	DSBC-125-200-PPVA-N3	1804668	DSBC-125-200-PPSA-N3
	250	1804964	DSBC-125-250-PPVA-N3	1804669	DSBC-125-250-PPSA-N3
	320	1804965	DSBC-125-320-PPVA-N3	1804671	DSBC-125-320-PPSA-N3
	400	1804966	DSBC-125-400-PPVA-N3	1804672	DSBC-125-400-PPSA-N3
	500	1804967	DSBC-125-500-PPVA-N3	1804673	DSBC-125-500-PPSA-N3
	1 ... 2800	1755348	DSBC-125-...-PPVA-N3	1755619	DSBC-125-...-PPSA-N3

Note

Other variants in the modular product system ➔ page 34

Datasheet

Ordering data – Versions for DSBC-...D3 (sensor slots on 3 sides)

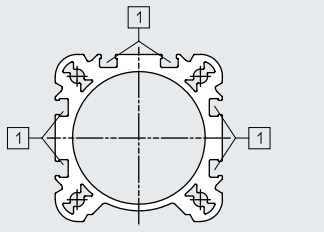

In this version, the piston position can be sensed on 3 sides of the drive.

[1] Sensor slot for proximity switch

Piston Ø [mm]	Stroke [mm]	With PPV cushioning Part no.	Type	With PPS cushioning Part no.	Type
32	20	3656511	DSBC-32-20-D3-PPVA-N3	3659374	DSBC-32-20-D3-PPSA-N3
	25	3656512	DSBC-32-25-D3-PPVA-N3	3659375	DSBC-32-25-D3-PPSA-N3
	30	3656513	DSBC-32-30-D3-PPVA-N3	3659376	DSBC-32-30-D3-PPSA-N3
	40	3656514	DSBC-32-40-D3-PPVA-N3	3659377	DSBC-32-40-D3-PPSA-N3
	50	3656515	DSBC-32-50-D3-PPVA-N3	3659378	DSBC-32-50-D3-PPSA-N3
	60	3656516	DSBC-32-60-D3-PPVA-N3	3659379	DSBC-32-60-D3-PPSA-N3
	70	3656517	DSBC-32-70-D3-PPVA-N3	3659380	DSBC-32-70-D3-PPSA-N3
	80	3656518	DSBC-32-80-D3-PPVA-N3	3659381	DSBC-32-80-D3-PPSA-N3
	100	3656519	DSBC-32-100-D3-PPVA-N3	3659382	DSBC-32-100-D3-PPSA-N3
	125	3656520	DSBC-32-125-D3-PPVA-N3	3659383	DSBC-32-125-D3-PPSA-N3
	150	3656521	DSBC-32-150-D3-PPVA-N3	3659384	DSBC-32-150-D3-PPSA-N3
	160	3656522	DSBC-32-160-D3-PPVA-N3	3659385	DSBC-32-160-D3-PPSA-N3
	200	3656523	DSBC-32-200-D3-PPVA-N3	3659386	DSBC-32-200-D3-PPSA-N3
	250	3656524	DSBC-32-250-D3-PPVA-N3	3659387	DSBC-32-250-D3-PPSA-N3
	300	3656525	DSBC-32-300-D3-PPVA-N3	3659388	DSBC-32-300-D3-PPSA-N3
	320	3656526	DSBC-32-320-D3-PPVA-N3	3659389	DSBC-32-320-D3-PPSA-N3
	400	8165440	DSBC-32-400-D3-PPVA-N3	8165446	DSBC-32-400-D3-PPSA-N3
	500	8165460	DSBC-32-500-D3-PPVA-N3	8165461	DSBC-32-500-D3-PPSA-N3
40	20	3660615	DSBC-40-20-D3-PPVA-N3	3660759	DSBC-40-20-D3-PPSA-N3
	25	3660616	DSBC-40-25-D3-PPVA-N3	3660760	DSBC-40-25-D3-PPSA-N3
	30	3660617	DSBC-40-30-D3-PPVA-N3	3660761	DSBC-40-30-D3-PPSA-N3
	40	3660618	DSBC-40-40-D3-PPVA-N3	3660762	DSBC-40-40-D3-PPSA-N3
	50	3660619	DSBC-40-50-D3-PPVA-N3	3660763	DSBC-40-50-D3-PPSA-N3
	60	3660620	DSBC-40-60-D3-PPVA-N3	3660764	DSBC-40-60-D3-PPSA-N3
	70	3660621	DSBC-40-70-D3-PPVA-N3	3660765	DSBC-40-70-D3-PPSA-N3
	80	3660622	DSBC-40-80-D3-PPVA-N3	3660766	DSBC-40-80-D3-PPSA-N3
	100	3660623	DSBC-40-100-D3-PPVA-N3	3660767	DSBC-40-100-D3-PPSA-N3
	125	3660624	DSBC-40-125-D3-PPVA-N3	3660768	DSBC-40-125-D3-PPSA-N3
	150	3660625	DSBC-40-150-D3-PPVA-N3	3660769	DSBC-40-150-D3-PPSA-N3
	160	3660626	DSBC-40-160-D3-PPVA-N3	3660770	DSBC-40-160-D3-PPSA-N3
	200	3660627	DSBC-40-200-D3-PPVA-N3	3660771	DSBC-40-200-D3-PPSA-N3
	250	3660628	DSBC-40-250-D3-PPVA-N3	3660772	DSBC-40-250-D3-PPSA-N3
	300	3660629	DSBC-40-300-D3-PPVA-N3	3660773	DSBC-40-300-D3-PPSA-N3
	320	3660630	DSBC-40-320-D3-PPVA-N3	3660774	DSBC-40-320-D3-PPSA-N3
	400	8165582	DSBC-40-400-D3-PPVA-N3	8165583	DSBC-40-400-D3-PPSA-N3
	500	8165584	DSBC-40-500-D3-PPVA-N3	8165586	DSBC-40-500-D3-PPSA-N3

Note

Other variants in the modular product system ➔ page 34

Datasheet

Ordering data – Versions for DSBC-...D3 (sensor slots on 3 sides)

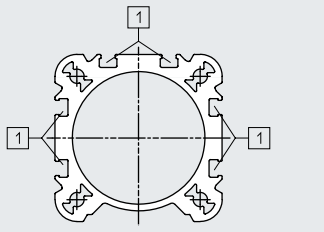

In this version, the piston position can be sensed on 3 sides of the drive.

[1] Sensor slot for proximity switch

Piston ⌀ [mm]	Stroke [mm]	With PPV cushioning Part no.	Type	With PPS cushioning Part no.	Type
50	20	3659467	DSBC-50-20-D3-PPVA-N3	3659491	DSBC-50-20-D3-PPSA-N3
	25	3659468	DSBC-50-25-D3-PPVA-N3	3659492	DSBC-50-25-D3-PPSA-N3
	30	3659469	DSBC-50-30-D3-PPVA-N3	3659493	DSBC-50-30-D3-PPSA-N3
	40	3659470	DSBC-50-40-D3-PPVA-N3	3659494	DSBC-50-40-D3-PPSA-N3
	50	3659471	DSBC-50-50-D3-PPVA-N3	3659495	DSBC-50-50-D3-PPSA-N3
	60	3659472	DSBC-50-60-D3-PPVA-N3	3659496	DSBC-50-60-D3-PPSA-N3
	70	3659473	DSBC-50-70-D3-PPVA-N3	3659497	DSBC-50-70-D3-PPSA-N3
	80	3659474	DSBC-50-80-D3-PPVA-N3	3659498	DSBC-50-80-D3-PPSA-N3
	100	3659475	DSBC-50-100-D3-PPVA-N3	3659499	DSBC-50-100-D3-PPSA-N3
	125	3659476	DSBC-50-125-D3-PPVA-N3	3659500	DSBC-50-125-D3-PPSA-N3
	150	3659477	DSBC-50-150-D3-PPVA-N3	3659501	DSBC-50-150-D3-PPSA-N3
	160	3659478	DSBC-50-160-D3-PPVA-N3	3659502	DSBC-50-160-D3-PPSA-N3
	200	3659479	DSBC-50-200-D3-PPVA-N3	3659503	DSBC-50-200-D3-PPSA-N3
	250	3659480	DSBC-50-250-D3-PPVA-N3	3659504	DSBC-50-250-D3-PPSA-N3
	300	3659481	DSBC-50-300-D3-PPVA-N3	3659505	DSBC-50-300-D3-PPSA-N3
	320	3659482	DSBC-50-320-D3-PPVA-N3	3659506	DSBC-50-320-D3-PPSA-N3
	400	8165587	DSBC-50-400-D3-PPVA-N3	8165588	DSBC-50-400-D3-PPSA-N3
	500	8165589	DSBC-50-500-D3-PPVA-N3	8165590	DSBC-50-500-D3-PPSA-N3
63	20	3657859	DSBC-63-20-D3-PPVA-N3	3657811	DSBC-63-20-D3-PPSA-N3
	25	3657860	DSBC-63-25-D3-PPVA-N3	3657812	DSBC-63-25-D3-PPSA-N3
	30	3657861	DSBC-63-30-D3-PPVA-N3	3657813	DSBC-63-30-D3-PPSA-N3
	40	3657862	DSBC-63-40-D3-PPVA-N3	3657814	DSBC-63-40-D3-PPSA-N3
	50	3657863	DSBC-63-50-D3-PPVA-N3	3657815	DSBC-63-50-D3-PPSA-N3
	60	3657864	DSBC-63-60-D3-PPVA-N3	3657816	DSBC-63-60-D3-PPSA-N3
	70	3657865	DSBC-63-70-D3-PPVA-N3	3657817	DSBC-63-70-D3-PPSA-N3
	80	3657866	DSBC-63-80-D3-PPVA-N3	3657818	DSBC-63-80-D3-PPSA-N3
	100	3657867	DSBC-63-100-D3-PPVA-N3	3657819	DSBC-63-100-D3-PPSA-N3
	125	3657868	DSBC-63-125-D3-PPVA-N3	3657820	DSBC-63-125-D3-PPSA-N3
	150	3657869	DSBC-63-150-D3-PPVA-N3	3657821	DSBC-63-150-D3-PPSA-N3
	160	3657870	DSBC-63-160-D3-PPVA-N3	3657822	DSBC-63-160-D3-PPSA-N3
	200	3657871	DSBC-63-200-D3-PPVA-N3	3657823	DSBC-63-200-D3-PPSA-N3
	250	3657872	DSBC-63-250-D3-PPVA-N3	3657824	DSBC-63-250-D3-PPSA-N3
	300	3657873	DSBC-63-300-D3-PPVA-N3	3657825	DSBC-63-300-D3-PPSA-N3
	320	3657874	DSBC-63-320-D3-PPVA-N3	3657826	DSBC-63-320-D3-PPSA-N3
	400	8165591	DSBC-63-400-D3-PPVA-N3	8165592	DSBC-63-400-D3-PPSA-N3
	500	8165593	DSBC-63-500-D3-PPVA-N3	8165594	DSBC-63-500-D3-PPSA-N3

Note

Other variants in the modular product system ➔ page 34

Datasheet

Ordering data – Versions for DSBC-...D3 (sensor slots on 3 sides)

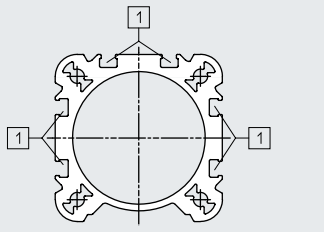

In this version, the piston position can be sensed on 3 sides of the drive.

[1] Sensor slot for proximity switch

Piston Ø [mm]	Stroke [mm]	With PPV cushioning Part no.	Type	With PPS cushioning Part no.	Type
80	20	3656631	DSBC-80-20-D3-PPVA-N3	3656854	DSBC-80-20-D3-PPSA-N3
	25	3656632	DSBC-80-25-D3-PPVA-N3	3656855	DSBC-80-25-D3-PPSA-N3
	30	3656633	DSBC-80-30-D3-PPVA-N3	3656856	DSBC-80-30-D3-PPSA-N3
	40	3656634	DSBC-80-40-D3-PPVA-N3	3656857	DSBC-80-40-D3-PPSA-N3
	50	3656635	DSBC-80-50-D3-PPVA-N3	3656858	DSBC-80-50-D3-PPSA-N3
	60	3656636	DSBC-80-60-D3-PPVA-N3	3656859	DSBC-80-60-D3-PPSA-N3
	70	3656637	DSBC-80-70-D3-PPVA-N3	3656860	DSBC-80-70-D3-PPSA-N3
	80	3656638	DSBC-80-80-D3-PPVA-N3	3656861	DSBC-80-80-D3-PPSA-N3
	100	3656639	DSBC-80-100-D3-PPVA-N3	3656862	DSBC-80-100-D3-PPSA-N3
	125	3656640	DSBC-80-125-D3-PPVA-N3	3656863	DSBC-80-125-D3-PPSA-N3
	150	3656641	DSBC-80-150-D3-PPVA-N3	3656864	DSBC-80-150-D3-PPSA-N3
	160	3656642	DSBC-80-160-D3-PPVA-N3	3656865	DSBC-80-160-D3-PPSA-N3
	200	3656643	DSBC-80-200-D3-PPVA-N3	3656866	DSBC-80-200-D3-PPSA-N3
	250	3656644	DSBC-80-250-D3-PPVA-N3	3656867	DSBC-80-250-D3-PPSA-N3
	300	3656645	DSBC-80-300-D3-PPVA-N3	3656868	DSBC-80-300-D3-PPSA-N3
	320	3656646	DSBC-80-320-D3-PPVA-N3	3656869	DSBC-80-320-D3-PPSA-N3
	400	8165595	DSBC-80-400-D3-PPVA-N3	8165596	DSBC-80-400-D3-PPSA-N3
	500	8165597	DSBC-80-500-D3-PPVA-N3	8165598	DSBC-80-500-D3-PPSA-N3
100	25	8165653	DSBC-100-25-D3-PPVA-N3	8165693	DSBC-100-25-D3-PPSA-N3
	40	8165656	DSBC-100-40-D3-PPVA-N3	8165690	DSBC-100-40-D3-PPSA-N3
	50	8165658	DSBC-100-50-D3-PPVA-N3	8165695	DSBC-100-50-D3-PPSA-N3
	80	8165660	DSBC-100-80-D3-PPVA-N3	8165697	DSBC-100-80-D3-PPSA-N3
	100	8165649	DSBC-100-100-D3-PPVA-N3	8165689	DSBC-100-100-D3-PPSA-N3
	125	8165650	DSBC-100-125-D3-PPVA-N3	8165694	DSBC-100-125-D3-PPSA-N3
	160	8165651	DSBC-100-160-D3-PPVA-N3	8165686	DSBC-100-160-D3-PPSA-N3
	200	8165652	DSBC-100-200-D3-PPVA-N3	8165688	DSBC-100-200-D3-PPSA-N3
	250	8165654	DSBC-100-250-D3-PPVA-N3	8165691	DSBC-100-250-D3-PPSA-N3
	320	8165655	DSBC-100-320-D3-PPVA-N3	8165696	DSBC-100-320-D3-PPSA-N3
	400	8165657	DSBC-100-400-D3-PPVA-N3	8165692	DSBC-100-400-D3-PPSA-N3
	500	8165659	DSBC-100-500-D3-PPVA-N3	8165687	DSBC-100-500-D3-PPSA-N3
125	25	8165670	DSBC-125-25-D3-PPVA-N3	8165669	DSBC-125-25-D3-PPSA-N3
	40	8165676	DSBC-125-40-D3-PPVA-N3	8165675	DSBC-125-40-D3-PPSA-N3
	50	8165680	DSBC-125-50-D3-PPVA-N3	8165679	DSBC-125-50-D3-PPSA-N3
	80	8165684	DSBC-125-80-D3-PPVA-N3	8165683	DSBC-125-80-D3-PPSA-N3
	100	8165662	DSBC-125-100-D3-PPVA-N3	8165661	DSBC-125-100-D3-PPSA-N3
	125	8165664	DSBC-125-125-D3-PPVA-N3	8165663	DSBC-125-125-D3-PPSA-N3
	160	8165666	DSBC-125-160-D3-PPVA-N3	8165665	DSBC-125-160-D3-PPSA-N3
	200	8165668	DSBC-125-200-D3-PPVA-N3	8165667	DSBC-125-200-D3-PPSA-N3
	250	8165672	DSBC-125-250-D3-PPVA-N3	8165671	DSBC-125-250-D3-PPSA-N3
	320	8165674	DSBC-125-320-D3-PPVA-N3	8165673	DSBC-125-320-D3-PPSA-N3
	400	8165678	DSBC-125-400-D3-PPVA-N3	8165677	DSBC-125-400-D3-PPSA-N3
	500	8165682	DSBC-125-500-D3-PPVA-N3	8165681	DSBC-125-500-D3-PPSA-N3

Note

Other variants in the modular product system ➔ page 34

Ordering data – Modular product system

Ordering table

Size	32	40	50	63	80	100	125	Conditions	Code		Enter code
Module no.	1463250	1461995	1463770	1463475	1463495	1463520	1722457				
Function	Standards-based cylinder, double-acting, based on ISO 15552								**DSBC**		DSBC
Protection against rotation	With protection against rotation						–	[1]	**-Q**		
Running characteristics	Standard										
	Low friction						–	[2]	**L**		
	Constant, slow movement							[2]	**U**		
	Low friction for balancer applications							[3]	**L1**		
Piston ⌀ [mm]	32	40	50	63	80	100	125		**-...**		
Stroke [mm]	1 ... 2800								**-...**		
Piston rod type	At one end										
	Through piston rod							[4] [5]	**-T**		
Piston rod thread type	Male thread										
	Female thread							[6]	**F**		
Profile type	Sensor slot on one side										
	Sensor slot on three sides								**D3**		
Cushioning	Elastic cushioning rings/plates at both ends								**-P**		
	Pneumatic cushioning, self-adjusting at both ends								**-PPS**		
	Pneumatic cushioning, adjustable at both ends							[5]	**-PPV**		
Position sensing	Via proximity switch								**A**		A

[1] Q Only up to a stroke of 1500 mm
[2] L, U Not with Q
[3] L1 Only up to a stroke of 1000 mm
[4] T Not with L, U
[5] T, PPV Not with L1
[6] F Not with N3

Note

If feature L is used in combination with transverse forces or strokes of above 500 mm, suitable measures must be taken to support the piston rod.
The operating pressure (➔ page 10) is applicable for strokes up to 500 mm

Note

If feature L1 is used in combination with strokes of above 500 mm, suitable measures must be taken to support the piston rod.
The operating pressure (➔ page 10) is applicable for strokes up to 500 mm.

Ordering data – Modular product system

Ordering table

Size		32	40	50	63	80	100	125	Conditions	Code	Enter code
Standard		Based on ISO 15552									
		Conforms to ISO 15552								**-N3**	
Corrosion protection		Standard									
		High corrosion protection							[6]	**R3**	
Temperature range		Standard									
	[°C]	Heat-resistant seals up to max. 120							[6] [7]	**T1**	
	[°C]	–40 ... +80							[6] [7] [8]	**T3**	
	[°C]	0 ... +150							[6] [7] [8]	**T4**	
Protection against particles		Standard									
		Bellows on the bearing cap						–	[6] [8] [9] [10] [11]	**P2**	
Scraper variant		Increased chemical resistance							[6] [7] [8] [10] [12] [13] [14]	**A1**	
		Hard scraper							[6] [8] [10] [13] [15]	**A2**	
		For unlubricated operation							[6] [8] [10] [13] [14]	**A3**	
		Metal scraper							[6] [8] [13] [14] [15]	**A6**	
EU certification	[mm]	II 2GD							[6] [10] [13]	**EX4**	
Stroke adjustment, extending	[mm]	0 ... 25							[18]	**-25KE**	
	[mm]	–	0 ... 50						[18]	**-50KE**	
Piston rod extension	[mm]	1 ... 500							[9] [16]	**-...E**	
Piston rod thread extension	[mm]	1 ... 35		1 ... 70					[9] [16] [17]	**-...L**	

[6]	R3, T1, T3, T4, P2, A1, A2, A3, A6, EX4	Not with L, U, L1
[7]	T1, T3, T4, A1	Not with PPS
[8]	T3, T4, P2, A1, A2, A3, A6	Not with Q
[9]	P2, ...E, ...L	Not with N3
[10]	P2, A1, A2, A3, EX4	Not with T1, T3, T4
[11]	P2	Only up to a stroke of 500 mm
[12]	A1	Not with P
[13]	A1, A2, A3, A6, EX4	Not with P2
[14]	A1, A3, A6	Not with EX4
[15]	A2, A6	Not with R3
[16]	...E, ...L	Only up to a stroke of 2000 mm
[17]	...L	Not with F
[18]	KE	Only up to a stroke of 1500 mm Not with combination Q-C Not with L, U, L1, N3, T1, T3, T4, A1, A2, A6, EX4

Note

The piston rod extension for the protective bellows is automatically taken into consideration when feature P2 is selected. This means that there is no need to specify a value for feature ...E.

Note

When feature ...E is selected in combination with feature P2, the part of the piston rod extension ...E is not covered by the protective bellows.

Note

When feature P2 is selected in combination with feature T (through piston rod), the protective bellows is mounted at one end only.

Ordering data – Modular product system

Ordering table

Size		32	40	50	63	80	100	125	Conditions	Code		Enter code
Module no.		**1463250**	**1461995**	**1463770**	**1463475**	**1463495**	**1463520**	**1722457**				
Function		Standards-based cylinder, double-acting, based on ISO 15552								**DSBC**		DSBC
Protection against rotation		With protection against rotation						–	[1]	**-Q**		
Piston ⌀	[mm]	32	40	50	63	80	100	125		**-...**		
Stroke	[mm]	10 ... 2000								**-...**		
Clamping unit		Attached								**-C**		C
Piston rod type		At one end										
		Through piston rod							[2]	**T**		
Piston rod thread type		Male thread										
		Female thread								**F**		
Profile type		Sensor slot on one side										
		Sensor slot on three sides								**D3**		
Cushioning		Elastic cushioning rings/plates at both ends								**-P**		
		Pneumatic cushioning, self-adjusting at both ends								**-PPS**		
		Pneumatic cushioning, adjustable at both ends								**-PPV**		
Position sensing		Via proximity switch								**A**		A
Stroke adjustment, extending	[mm]	0 ... 25							[3]	**-25KE**		
	[mm]	–	0 ... 50						[3]	**-50KE**		
Piston rod extension	[mm]	1 ... 500								**-...E**		
Piston rod thread extension	[mm]	1 ... 35		1 ... 70					[4]	**-...L**		

[1] Q Only up to a stroke of 1500 mm
[2] T Mandatory with Q
[3] KE Only up to a stroke of 1500 mm
Not with Q
[4] ...L Not with F

Ordering data – Modular product system

Ordering table										
Size	32	40	50	63	80	100	Conditions	Code		Enter code
Module no.	**1463250**	**1461995**	**1463770**	**1463475**	**1463495**	**1463520**				
Function	Standards-based cylinder, double-acting, based on ISO 15552							**DSBC**		DSBC
Piston ø [mm]	32	40	50	63	80	100		**-...**		
Stroke [mm]	10 ... 2000							**-...**		
End-position locking	At both ends							**E1**		
	With advanced piston rod							**E2**		
	With retracted piston rod							**E3**		
Piston rod thread type	Male thread									
	Female thread							**F**		
Profile type	Sensor slot on one side									
	Sensor slot on three sides							**D3**		
Cushioning	Elastic cushioning rings/plates at both ends							**-P**		
	Pneumatic cushioning, adjustable at both ends							**-PPV**		
Position sensing	Via proximity switch							**A**		A
Piston rod extension [mm]	1 ... 500							**-...E**		
Piston rod thread extension [mm]	1 ... 35		1 ... 70				[1]	**-...L**		

[1] ...L Not with F

Ordering data – Modular product system

Ordering table

Size		32	40	50	63	80	100	125	Conditions	Code		Enter code
Module no.		8150687	8150688	8150689	8150690	8150691	8150692	8150693				
Function		Standards-based cylinder, double-acting, based on ISO 15552								**DSBC**		DSBC
Piston ⌀	[mm]	32	40	50	63	80	100	125		**-...**		
Stroke	[mm]	1 ... 2800								**-...**		
Piston rod type		At one end										
		Through piston rod								**T**		
Piston rod thread type		Male thread										
		Female thread							[1]	**F**		
Profile type		Sensor slot on one side										
		Sensor slot on three sides								**D3**		
Cushioning		Elastic cushioning rings/plates at both ends								**-P**		
		Pneumatic cushioning, self-adjusting at both ends								**-PPS**		
		Pneumatic cushioning, adjustable at both ends								**-PPV**		
Position sensing		Via proximity switch								**A**		A
Standard		Based on ISO 15552										
		Conforms to ISO 15552								**-N3**		
Special material properties		Recommended for production plants for manufacturing Li-ion batteries								**F1A**		F1A
Piston rod extension	[mm]	1 ... 500							[1] [2]	**-...E**		
Piston rod thread extension	[mm]	1 ... 70							[1] [2] [3]	**-...L**		

[1] F, ...E, ...L Not with N3
[2] ...E, ...L Only up to a stroke of 2000 mm
[3] ...L Not with F

Accessories

Foot mounting HNC/CRHNC

Material:
HNC: Galvanised steel
CRHNC: High-alloy steel

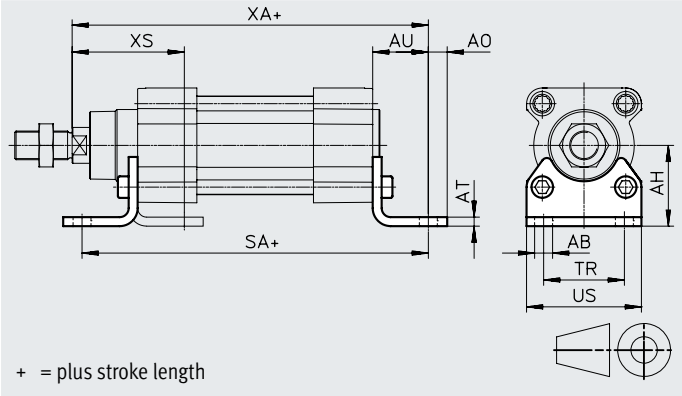

Dimensions and ordering data

For Ø [mm]	AB Ø	AH	AO	AT	AU	SA DSBC-...	SA DSBC-...-C	TR	US	XA DSBC-...	XA DSBC-...-C	XS
32	7	32	6.5	4	24	142	187	32	45	143.1	188.1	46
40	10	36	9	4	28	161	214	36	54	161.9	214.9	52.7
50	10	45	9.5	5	32	170	237	45	64	173.8	240.8	62.6
63	10	50	12.5	5	32	185	261	50	75	189.1	265.1	62.9
80	12	63	15	6	41	210	305	63	93	214.6	309.6	80.4
100	14.5	71	17.5	6	41	220	318	75	110	228.5	326.7	84.3
125	16.5	90	22	8	45	250	375	90	131	270	394.3	102

For Ø [mm]	Basic version CRC[1]	Weight [g]	Part no.	Type2)	Corrosion resistant CRC[1]	Weight [g]	Part no.	Type2)
32	1	144	**174369**	**HNC-32**	4	139	**176937**	**CRHNC-32**
40	1	193	**174370**	**HNC-40**	4	188	**176938**	**CRHNC-40**
50	1	353	**174371**	**HNC-50**	4	341	**176939**	**CRHNC-50**
63	1	436	**174372**	**HNC-63**	4	424	**176940**	**CRHNC-63**
80	1	829	**174373**	**HNC-80**	4	809	**176941**	**CRHNC-80**
100	1	1009	**174374**	**HNC-100**	4	990	**176942**	**CRHNC-100**
125	1	1902	**174375**	**HNC-125**	4	1920	**176943**	**CRHNC-125**

1) More information www.festo.com/x/topic/crc
2) Suitable for ATEX

Accessories

Flange mounting FNC/CRFNG

Material:
FNC: Galvanised steel
CRFNG: high-alloy steel
RoHs-compliant

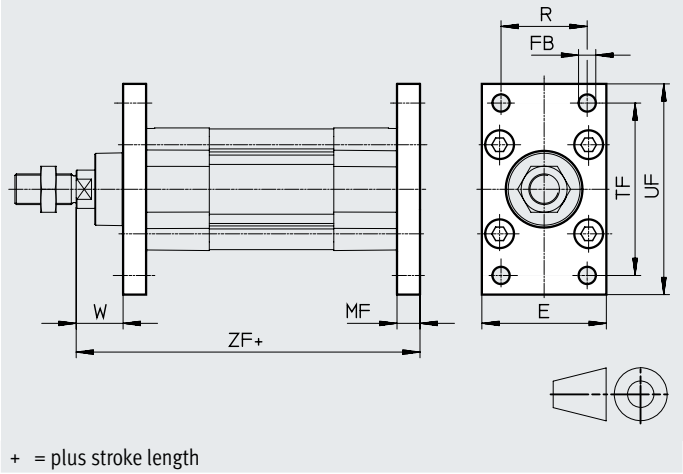

Dimensions and ordering data

For ⌀ [mm]	E	FB ⌀ H13	MF	R	TF	UF	W	ZF DSBC-...	ZF DSBC-...-C
32	45	7	10	32	64	80	16	129.1	174.1
40	54	9	10	36	72	90	18.7	143.9	196.9
50	65	9	12	45	90	110	23.6	153.8	220.8
63	75	9	12	50	100	120	23.9	169.1	245.1
80	93	12	16	63	126	150	29.4	189.6	284.6
100	110	14	16	75	150	175	33.3	203.5	301.7
125	132	16	20	90	180	210	45	245	369.3

For ⌀ [mm]	Basic version				Corrosion resistant			
	CRC[1]	Weight [g]	Part no.	Type2)	CRC[1]	Weight [g]	Part no.	Type2)
32	1	221	**174376**	**FNC-32**	4	220	**161846**	**CRFNG-32**
40	1	291	**174377**	**FNC-40**	4	291	**161847**	**CRFNG-40**
50	1	536	**174378**	**FNC-50**	4	526	**161848**	**CRFNG-50**
63	1	679	**174379**	**FNC-63**	4	680	**161849**	**CRFNG-63**
80	1	1495	**174380**	**FNC-80**	4	1508	**161850**	**CRFNG-80**
100	1	2041	**174381**	**FNC-100**	4	2054	**161851**	**CRFNG-100**
125	1	3775	**174382**	**FNC-125**	4	3787	**185363**	**CRFNG-125**

1) More information www.festo.com/x/topic/crc
2) Suitable for ATEX

Accessories

Trunnion flange ZNCF/CRZNG

Material:
ZNCF: Stainless steel casting
CRZNG: Electropolished stainless steel casting
RoHs-compliant

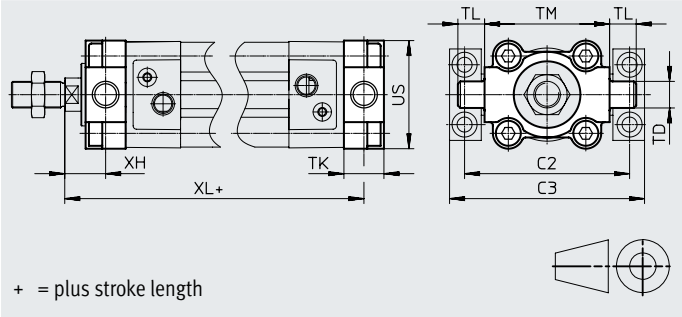

Dimensions and ordering data

For Ø [mm]	C2)	C3)	TD Ø e9	TK	TL	TM	US	XH	XL DSBC-...	XL DSBC-...-C
32	71	86	12	16	12	50	45	18	127.1	172.1
40	87	105	16	20	16	63	54	18.7	143.9	196.9
50	99	117	16	24	16	75	64	23.6	153.8	220.8
63	116	136	20	24	20	90	75	23.9	169.1	245.1
80	136	156	20	28	20	110	93	31.4	187.6	282.6
100	164	189	25	38	25	132	110	30.3	206.5	304.7
125	192	217	25	50	25	160	131	40	250	374.3

For Ø	Basic version				Corrosion resistant			
[mm]	CRC[1)]	Weight [g]	Part no.	Type2)	CRC[1)]	Weight [g]	Part no.	Type2)
32	2	150	**174411**	**ZNCF-32**	4	150	**161852**	**CRZNG-32**
40	2	285	**174412**	**ZNCF-40**	4	285	**161853**	**CRZNG-40**
50	2	473	**174413**	**ZNCF-50**	4	473	**161854**	**CRZNG-50**
63	2	687	**174414**	**ZNCF-63**	4	687	**161855**	**CRZNG-63**
80	2	1296	**174415**	**ZNCF-80**	4	1296	**161856**	**CRZNG-80**
100	2	2254	**174416**	**ZNCF-100**	4	2254	**161857**	**CRZNG-100**
125	2	3484	**174417**	**ZNCF-125**	4	3484	**185362**	**CRZNG-125**

1) More information www.festo.com/x/topic/crc
2) Suitable for ATEX

Accessories

Trunnion support LNZG

Material:
Trunnion support: Anodised aluminium
Plain bearing: Plastic
RoHs-compliant

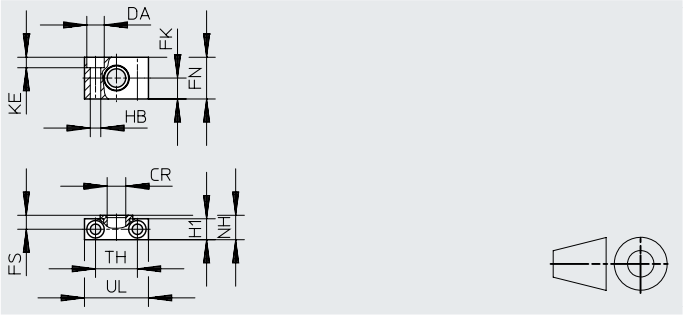

Dimensions and ordering data

For Ø [mm]	CR Ø D11	DA Ø H13	FK Ø ±0.1	FN	FS	H1	HB Ø H13	KE	NH	TH ±0.2	UL	CRC[1]	Weight [g]	Part no.	Type
32	12	11	15	30	10.5	15	6.6	6.8	18	32	46	2	90	**32959**	**LNZG-32**
40, 50	16	15	18	36	12	18	9	9	21	36	55	2	140	**32960**	**LNZG-4 0/50**
63, 80	20	18	20	40	13	20	11	11	23	42	65	2	190	**32961**	**LNZG-6 3/80**
100, 125	25	20	25	50	16	24.5	14	13	28.5	50	75	2	320	**32962**	**LNZG-10 0/125**

1) More information www.festo.com/x/topic/crc

Trunnion support CRLNZG

Material:
High-alloy steel
RoHs-compliant

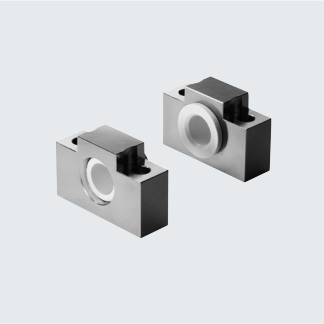

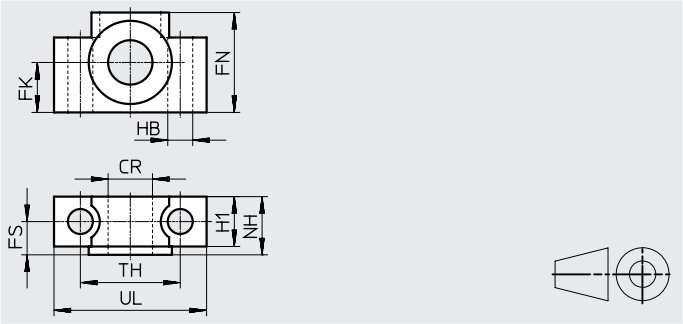

Dimensions and ordering data

For Ø [mm]	CR Ø D11	FK Ø ±0.1	FN	FS	H1	HB Ø H13	NH	TH ±0.2	UL	CRC[1]	Weight [g]	Part no.	Type
32	12	15	30	10.5	15	6.6	18	32	46	4	205	**161874**	**CRLNZG-32**
40, 50	16	18	36	12	18	9	21	36	55	4	323	**161875**	**CRLNZG-40/50**
63, 80	20	20	40	13	20	11	23	42	65	4	435	**161876**	**CRLNZG-63/80**
100, 125	25	25	50	16	24.5	14	28.5	50	75	4	739	**161877**	**CRLNZG-100/125**

1) More information www.festo.com/x/topic/crc

Accessories

Swivel flange SNC

Material:
Die-cast aluminium
RoHs-compliant

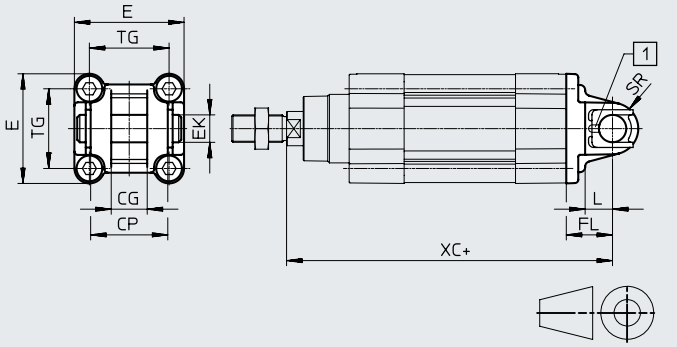

+ = plus stroke length
[1] The pivot pin is secured against rotation with a spring pin.

Dimensions and ordering data

For ⌀ [mm]	CG H14	CP h14	E	EK ⌀ H9	FL ±0.2	L	SR
32	14	34	45+0.2/–0.5	10	22	13	10
40	16	40	$54_{-0.5}$	12	25	16	12
50	21	45	$64_{-0.6}$	16	27	16	12
63	21	51	$75_{-0.6}$	16	32	21	16
80	25	65	$93_{-0.8}$	20	36	22	16
100	25	75	110+0.3/–0.8	20	41	27	20
125	37	97	$131_{-0.8}$	30	50	30	25

For ⌀ [mm]	TG	XC		CRC[1]	Weight [g]	Part no.	Type[2]
		DSBC-...	DSBC-...-C				
32	32.5	141.1	186.1	1	93	**174383**	**SNC-32**
40	38	158.9	211.9	1	140	**174384**	**SNC-40**
50	46.5	168.8	235.8	1	234	**174385**	**SNC-50**
63	56.5	189.1	265.1	1	331	**174386**	**SNC-63**
80	72	209.6	304.6	1	618	**174387**	**SNC-80**
100	89	228.5	326.7	1	865	**174388**	**SNC-100**
125	110	275	399.3	1	1728	**174389**	**SNC-125**

1) More information www.festo.com/x/topic/crc
2) Suitable for ATEX

Accessories

Swivel flange
SNCB/SNCB-...-R3

Material:
SNCB: Die-cast aluminium
SNCB-...-R3: Die-cast aluminium with protective coating
RoHs-compliant

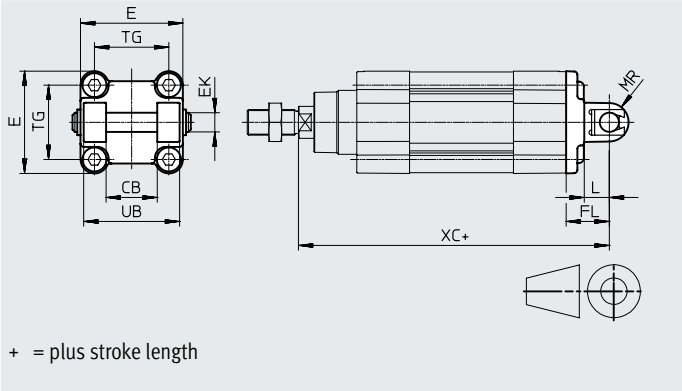

Dimensions and ordering data

For ⌀ [mm]	CB H14	E	EK ⌀ H9/e8	FL ±0.2	L	MR –0.5	TG	UB h14	XC DSBC-...	XC DSBC-...-C
32	26	45+0.2/–0.5	10	22	13	8.5	32.5	45	141.1	186.1
40	28	$54_{-0.5}$	12	25	16	12	38	52	158.9	211.9
50	32	$64_{-0.6}$	12	27	16	12	46.5	60	168.8	235.8
63	40	$75_{-0.6}$	16	32	21	16	56.5	70	189.1	265.1
80	50	$93_{-0.8}$	16	36	22	16	72	90	209.6	304.6
100	60	110+0.3/–0.8	20	41	27	20	89	110	228.5	326.7
125	70	$131_{-0.8}$	25	50	30	25	110	130	275	399.3

For ⌀ [mm]	Basic version CRC[1]	Weight [g]	Part no.	Type	R3 – High corrosion protection CRC[1]	Weight [g]	Part no.	Type
32	1	103	**174390**	**SNCB-32**	3	100	**176944**	**SNCB-32-R3**
40	1	155	**174391**	**SNCB-40**	3	151	**176945**	**SNCB-40-R3**
50	1	232	**174392**	**SNCB-50**	3	228	**176946**	**SNCB-50-R3**
63	1	375	**174393**	**SNCB-63**	3	371	**176947**	**SNCB-63-R3**
80	1	636	**174394**	**SNCB-80**	3	632	**176948**	**SNCB-80-R3**
100	1	1035	**174395**	**SNCB-100**	3	986	**176949**	**SNCB-100-R3**
125	1	1860	**174396**	**SNCB-125**	3	1776	**176950**	**SNCB-125-R3**

1) More information www.festo.com/x/topic/crc

Accessories

Swivel flange
SNCS/CRSNCS/SNCS-...-R3

Material:
SNCS 32 ... 50: Die-cast aluminium
SNCS 63 ... 125:
Wrought aluminium alloy
CRSNCS 32 ... 80:
High-alloy stainless steel
SNCS-...-R3 100 ... 125:
Wrought aluminium alloy with protective coating
RoHs-compliant

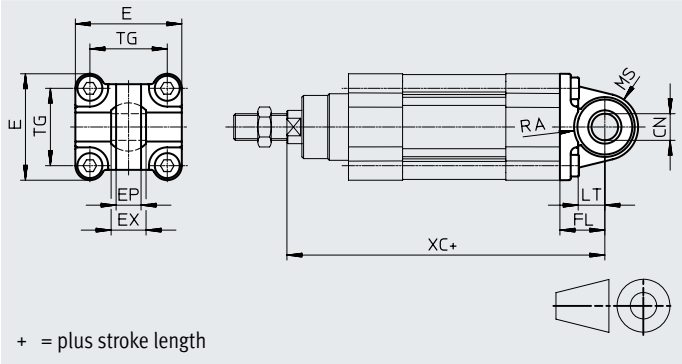

Dimensions and ordering data

For ⌀ [mm]	CN ⌀ DSBC-...	CN ⌀ DSBC-...-R3	E DSBC-...	E DSBC-...-R3	EP ±0.2	EX	FL ±0.2	LT
32	$10^{+0.013}$	10+0.015/–0.04	45+0.2/–0.5	45–0.5	10.5	14	22	13
40	$12^{+0.015}$	12+0.018/–0.04	$54_{-0.5}$	$54_{-0.5}$	12	16	25	16
50	$16^{+0.015}$	16+0.018/–0.04	$64_{-0.6}$	$64_{-0.6}$	15	21	27	16
63	$16^{+0.015}$	16+0.018/–0.04	74.5±0.5	$75_{-0.6}$	15	21	32	21
80	$20^{+0.018}$	20+0.021/–0.04	92.2±0.8	$93_{-0.8}$	18	25	36	22
100	$20^{+0.018}$	20+0.021/–0.04	109+1/–0.7	109+1/–0.7	18	25	41	27
125	$30^{+0.018}$	30+0.021/–0.04	132+1/–0.7	132+1/–0.7	25	37	50	30

For ⌀ [mm]	MS DSBC-...	MS DSBC-...-R3	RA DSBC-... +1	RA DSBC-...-R3 +1	TG	XC DSBC-...	XC DSBC-...-C
32	$15^{+0.5}$	$15^{+0.5}$	14.5	14.5	32.5	141.1	186.1
40	$17^{+0.5}$	$17^{+0.5}$	17.5	17.5	38	158.9	211.9
50	$20^{+0.5}$	$20^{+0.5}$	18.5	19	46.5	168.8	235.8
63	$23_{-0.5}$	$22^{+0.5}$	23	23	56.5	189.1	265.1
80	$28_{-0.5}$	$27^{+0.5}$	25	25	72	209.6	304.6
100	30±0.5	30±0.5	95	100	89	228.5	326.7
125	39±0.5	39±0.5	100	100	110	275	326.7

For ⌀ [mm]	Basic version CRC[1]	Basic version Weight [g]	Basic version Part no.	Basic version Type	High corrosion protection CRC[1]	High corrosion protection Weight [g]	High corrosion protection Part no.	High corrosion protection Type
32	1	86	**174397**	**SNCS-32**	4	161	**2895920**	**CRSNCS-32**
40	1	122	**174398**	**SNCS-40**	4	239	**2895921**	**CRSNCS-40**
50	1	216	**174399**	**SNCS-50**	4	403	**2895922**	**CRSNCS-50**
63	2	281	**174400**	**SNCS-63**	4	576	**2895923**	**CRSNCS-63**
80	2	557	**174401**	**SNCS-80**	4	1173	**2895924**	**CRSNCS-80**
100	2	683	**174402**	**SNCS-100**	3	684	**2895925**	**SNCS-100-R3**
125	2	1369	**174403**	**SNCS-125**	3	1369	**2895926**	**SNCS-125-R3**

1) More information www.festo.com/x/topic/crc

Accessories

Swivel flange SNCL

Material:
Die-cast aluminium
RoHs-compliant

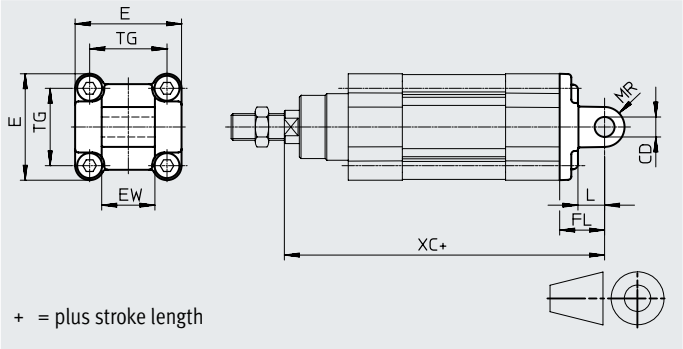

Dimensions and ordering data

For ⌀ [mm]	CD ⌀ H9	E	EW h12	FL ±0.2	L	MR
32	10	45+0.2/–0.5	26	22	13	10
40	12	$54_{-0.5}$	28	25	16	12
50	12	$64_{-0.6}$	32	27	16	12
63	16	$75_{-0.6}$	40	32	21	16
80	16	$93_{-0.8}$	50	36	22	16
100	20	110+0.3/–0.8	60	41	27	20
125	25	$131_{-0.8}$	70	50	30	25

For ⌀ [mm]	TG	XC		CRC[1]	Weight [g]	Part no.	Type
		DSBC-...	DSBC-...-C				
32	32.5	141.1	186.1	1	71	**174404**	**SNCL-32**
40	38	158.9	211.9	1	95	**174405**	**SNCL-40**
50	46.5	168.8	235.8	1	158	**174406**	**SNCL-50**
63	56.5	189.1	265.1	1	225	**174407**	**SNCL-63**
80	72	209.6	304.6	1	436	**174408**	**SNCL-80**
100	89	228.5	326.7	1	606	**174409**	**SNCL-100**
125	110	275	399.3	1	1135	**174410**	**SNCL-125**

1) More information www.festo.com/x/topic/crc

Accessories

Trunnion mounting kit DAMT

The kit can be attached at any position along the profile barrel of the cylinder.

Material:
Galvanised steel
RoHs-compliant

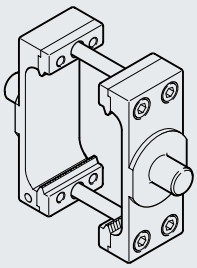

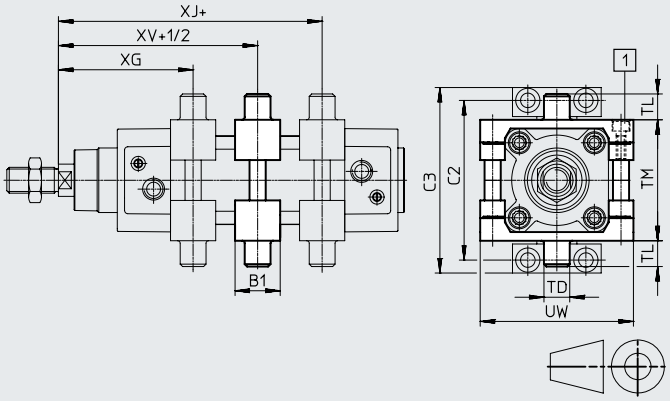

\+ = plus stroke length
\+ ½ = plus half stroke length [1] Max. Tightening torque

Dimensions and ordering data

For Ø [mm]	B1	C2)	C3)	TD Ø e9	TL	TM	UW
32	30	71	86	12	12	50	65
40	32	87	105	16	16	63	75
50	34	99	117	16	16	75	95
63	41	116	136	20	20	90	105
80	44	136	156	20	20	110	130
100	48	164	189	25	25	132	145
125	50	192	217	25	25	160	177

For Ø [mm]	XG min.	XJ max.	XV	Max. Tightening torque [Nm]	CRC[1)]	Weight [g]	Part no.	Type2)
32	69±1.4	76±1.4	73±1.4	4+1	1	213	**2213233**	**DAMT-V1-32-A**
40	77.7±1.4	84.9±1.4	81.2±1.4	8+1	1	388	**2214899**	**DAMT-V1-40-A**
50	85.6±1.4	91.8±1.4	88.6±1.4	8+2	1	608	**2214909**	**DAMT-V1-50-A**
63	96.9±1.8	96.1±1.8	96.4±1.8	18+2	1	911	**2214971**	**DAMT-V1-63-A**
80	110.4±1.8	108.6±1.8	109.4±1.8	28+2	1	1494	**163529**	**DAMT-V1-80-A**
100	121.3±1.8	115.5±1.8	118.3±1.8	28+2	1	2095	**163530**	**DAMT-V1-100-A**
125	134.7±1.8	155.3±1.8	145±1.8	40+2	1	3548	**1812524**	**DAMT-V8-125-A**

1) More information www.festo.com/x/topic/crc
2) Suitable for ATEX

Accessories

Ordering data – Mounting components

Datasheets → Internet: clevis foot

Designation	For Ø	Part no.	Type
Clevis foot LNG			
	32	**33890**	**LNG-32**
	40	**33891**	**LNG-40**
	50	**33892**	**LNG-50**
	63	**33893**	**LNG-63**
	80	**33894**	**LNG-80**
	100	**33895**	**LNG-100**
	125	**33896**	**LNG-125**
Clevis foot LSNG			
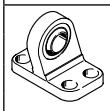	32	**31740**	**LSNG-32**
	40	**31741**	**LSNG-40**
	50	**31742**	**LSNG-50**
	63	**31743**	**LSNG-63**
	80	**31744**	**LSNG-80**
	100	**31745**	**LSNG-100**
	125	**31746**	**LSNG-125**
Clevis foot LBG 1)			
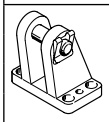	32	**31761**	**LBG-32**
	40	**31762**	**LBG-40**
	50	**31763**	**LBG-50**
	63	**31764**	**LBG-63**
	80	**31765**	**LBG-80**
	100	**31766**	**LBG-100**
	125	**31767**	**LBG-125**

Designation	For Ø	Part no.	Type
Clevis foot LSN			
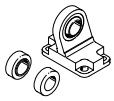	32	**5561**	**LSN-32**
	40	**5562**	**LSN-40**
	50	**5563**	**LSN-50**
	63	**5564**	**LSN-63**
	80	**5565**	**LSN-80**
	100	**5566**	**LSN-100**
	125	**6987**	**LSN-125**
Clevis foot LSNSG			
	32	**31747**	**LSNSG-32**
	40	**31748**	**LSNSG-40**
	50	**31749**	**LSNSG-50**
	63	**31750**	**LSNSG-63**
	80	**31751**	**LSNSG-80**
	100	**31752**	**LSNSG-100**
	125	**31753**	**LSNSG-125**
Right-angle clevis foot LQG 1)			
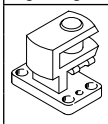	32	**31768**	**LQG-32**
	40	**31769**	**LQG-40**
	50	**31770**	**LQG-50**
	63	**31771**	**LQG-63**
	80	**31772**	**LQG-80**
	100	**31773**	**LQG-100**
	125	**31774**	**LQG-125**

1) Suitable for ATEX

Ordering data – Mounting components, corrosion-resistant

Datasheets → Internet: crlng

Designation	For Ø	Part no.	Type
Clevis foot CRLNG			
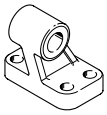	32	**161840**	**CRLNG-32**
	40	**161841**	**CRLNG-40**
	50	**161842**	**CRLNG-50**
	63	**161843**	**CRLNG-63**
	80	**161844**	**CRLNG-80**
	100	**161845**	**CRLNG-100**
	125	**176951**	**CRLNG-125**

Ordering data – Mounting components, high corrosion protection

Datasheets → Internet: clevis foot

Designation	For Ø	Part no.	Type
Clevis foot LBG-R3			
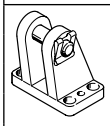	32	**2078790**	**LBG-32-R3**
	40	**2078792**	**LBG-40-R3**
	50	**2078794**	**LBG-50-R3**
	63	**2078795**	**LBG-63-R3**
	80	**2078797**	**LBG-80-R3**
	100	**2078799**	**LBG-100-R3**
	125	**2078837**	**LBG-125-R3**

Accessories

Ordering data – Piston rod attachments

Datasheets → Internet: piston rod attachment

Designation	For ⌀	Part no.	Type
Rod eye SGS			
	32	**9261**	**SGS-M10x1.25**
	40	**9262**	**SGS-M12x1.25**
	50	**9263**	**SGS-M16x1.5**
	63		
	80	**9264**	**SGS-M20x1.5**
	100		
	125	**10774**	**SGS-M27x2**
Rod clevis SG1)			
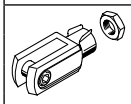	32	**6144**	**SG-M10x1.25**
	40	**6145**	**SG-M12x1.25**
	50	**6146**	**SG-M16x1.5**
	63		
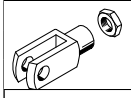	80	**6147**	**SG-M20x1.5**
	100		
	125	**14987**	**SG-M27x2-B**
Coupling piece KSG1)			
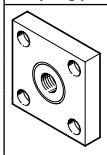	32	**32963**	**KSG-M10x1.25**
	40	**32964**	**KSG-M12x1.25**
	50	**32965**	**KSG-M16x1.5**
	63		
	80	**32966**	**KSG-M20x1.5**
	100		
	125	**32967**	**KSG-M27x2**

Designation	For ⌀	Part no.	Type
Rod clevis SGA1)			
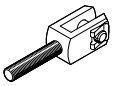	32	**32954**	**SGA-M10x1.25**
	40	**10767**	**SGA-M12x1.25**
	50	**10768**	**SGA-M16x1.5**
	63		
	80	**10769**	**SGA-M20x1.5**
	100		
	125	**10770**	**SGA-M27x2**
Self-aligning rod coupler FK1)			
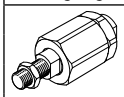	32	**6140**	**FK-M10x1.25**
	40	**6141**	**FK-M12x1.25**
	50	**6142**	**FK-M16x1.5**
	63		
	80	**6143**	**FK-M20x1.5**
	100		
	125	**10485**	**FK-M27x2**
Coupling piece KSZ1)			
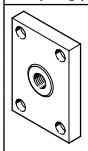	32	**36125**	**KSZ-M10x1.25**
	40	**36126**	**KSZ-M12x1.25**
	50	**36127**	**KSZ-M16x1.5**
	63		
	80	**36128**	**KSZ-M20x1.5**
	100		
	125	**–**	**–**

1) Suitable for ATEX

Ordering data – Piston rod attachments, corrosion-resistant

Datasheets → Internet: piston rod attachment

Designation	For ⌀	Part no.	Type
Rod eye CRSGS			
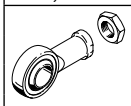	32	**195582**	**CRSGS-M10x1.25**
	40	**195583**	**CRSGS-M12x1.25**
	50	**195584**	**CRSGS-M16x1.5**
	63		
	80	**195585**	**CRSGS-M20x1.5**
	100		
	125	**195586**	**CRSGS-M27x2**
Self-aligning rod coupler CRFK1)			
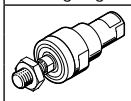	32	**2305778**	**CRFK-M10x1.25**
	40	**2305779**	**CRFK-M12x1.25**
	50	**2490673**	**CRFK-M16x1.5**
	63		
	80	**2545677**	**CRFK-M20x1.5**
	100		

Designation	For ⌀	Part no.	Type
Rod clevis CRSG1)			
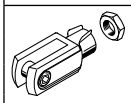	32	**13569**	**CRSG-M10x1.25**
	40	**13570**	**CRSG-M12x1.25**
	50	**13571**	**CRSG-M16x1.5**
	63		
	80	**13572**	**CRSG-M20x1.5**
	100		
	125	**185361**	**CRSG-M27x2**

1) Suitable for ATEX

Accessories

Bellows kit DADB

General technical data							
Type DADB-V6-		32	40	50	63	80	100
Max. stroke range of the cylinder1)	[mm]	10 … 500	10 … 500	10 … 500	10 … 500	10 … 500	10 … 500
Type of mounting		Via threaded pin					
Mounting position		Any					
Media resistance		Dust, chippings, oil, grease, fuel (➔ Internet: media resistance)					
Ambient temperature2)	[°C]	–10 … +80					
Degree of protection		IP54					
Corrosion resistance class CRC[3)]		3 - High corrosion stress					

1) In conjunction with the bellows kit DADB
2) Note operating range of proximity switches and cylinder
3) More information www.festo.com/x/topic/crc

Materials

Sectional view

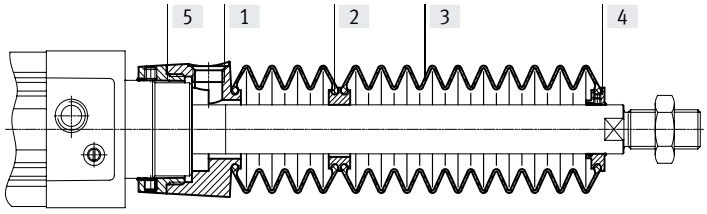

Bellows		
[1]	Connection	Polyamide
[2]	Intermediate piece	Polyamide
[3]	Bellows	NBR
[4]	End piece	Polyamide
[5]	Connector	Polyamide
–	O-ring	NBR
	Note on materials	RoHS-compliant

Weight [g]						
Type DADB-V6- Stroke [mm]	32	40	50	63	80	100
10 … 50	29	42	71	69	99	124
51 … 125	41	56	91	89	127	152
126 … 175	52	68	105	103	140	165
176 … 250	66	85	129	127	193	218
251 … 300	79	100	147	145	231	255
301 … 350	92	115	166	164	268	293
351 … 375	92	115	167	165	259	284
376 … 425	104	129	185	183	296	321
426 … 475	117	144	204	202	334	359
476 … 500	117	144	205	203	324	349

Accessories

Travel speed v as a function of tubing length l

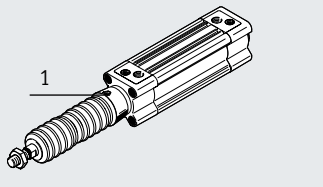

The bellows kit is a leak-free system. To prevent unwanted media from being drawn in, the supply and exhaust air must be ducted via a pressure compensation hole in the connection part [1].
The pressure generated in the bellows kit by the positioning motion is primarily defined by the travel speed and the tubing length. The recommended tubing length based on the travel speed of the drive can be read from the graph.

Advancing

DADB-32 ... 100

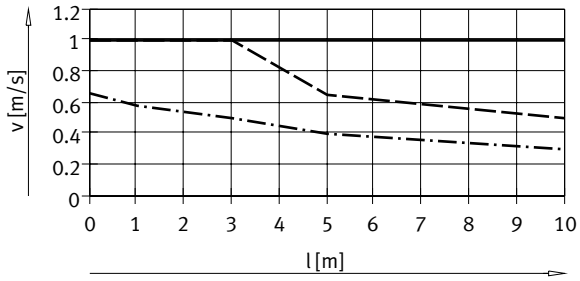

- Ø 32/ 50/63
- Ø 40
- Ø 80/100

Retracting

DADB-32 ... 100

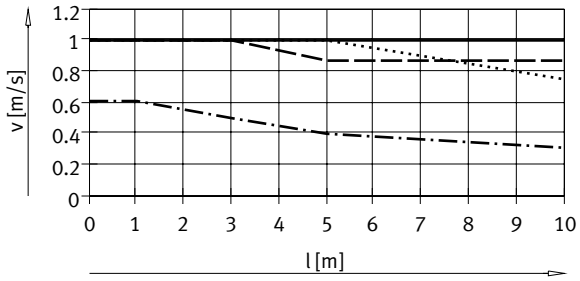

- Ø 32
- Ø 40
- Ø 50/63
- Ø 80/100

Note

The push-in fittings in the adjacent table must be used for the pressure compensation hole.
Silencers can be used as an alternative. This reduces the travel speed slightly.

Tubing size and push-in fitting for pressure compensation hole

Ø [mm]	Tubing O.D. [mm]	Push-in fitting Part no.	Type
32, 40	8	**186109**	**QS-G1/8-8-I**
		578376	**NPQH-DK-G18-Q8-P10**
		578362	**NPQH-D-G18-S8-P10**
50, 63, 80, 100	12	**186350**	**QS-G1/4-12**
		578344	**NPQH-D-G14-Q12-P10**
		578366	**NPQH-D-G14-S12-P10**

Accessories

Dimensions Download CAD data ➔ www.festo.com

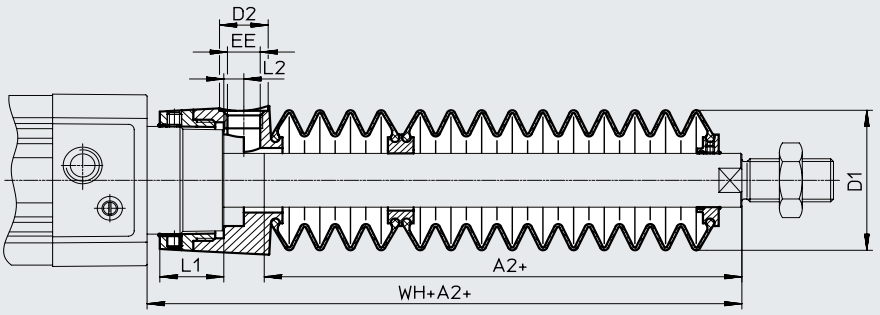

+ = plus stroke length

ø	32							40						
Stroke [mm]	A2[1)]	D1 max.	D2	EE	L1	L2	WH+A2	A2[1)]	D1 max.	D2	EE	L1	L2	WH+A2
10 … 50	29	38	14	G1/8	12.9	5.4	55	28	46	14	G1/8	16.3	5.4	56.7
51 … 125	47						73	43						71.7
126 … 175	61						87	56						84.7
176 … 250	80						106	72						100.7
251 … 300	96						122	86						114.7
301 … 350	112						138	100						128.7
351 … 375	114						140	101						129.7
376 … 425	130						156	115						143.7
426 … 475	145						171	130						158.7
476 … 500	147						173	131						159.7

ø	50							63						
Stroke [mm]	A2[1)]	D1 max.	D2	EE	L1	L2	WH+A2	A2[1)]	D1 max.	D2	EE	L1	L2	WH+A2
10 … 50	28	57	17	G1/4	22.35	7	63.6	28	57	17	G1/4	22.4	7	63.9
51 … 125	46						81.6	46						81.9
126 … 175	56						91.6	56						91.9
176 … 250	73						108.6	73						108.9
251 … 300	86						121.6	86						121.9
301 … 350	97						132.6	97						132.9
351 … 375	105						140.6	105						140.9
376 … 425	116						151.6	116						151.9
426 … 475	126						161.6	126						161.9
476 … 500	134						169.6	134						169.9

ø	80							100						
Stroke [mm]	A2[1)]	D1 max.	D2	EE	L1	L2	WH+A2	A2[1)]	D1 max.	D2	EE	L1	L2	WH+A2
10 … 50	25	93	17	G1/4	28	4	70.4	25	93	17	G1/4	28	4	74.3
51 … 125	37						82.4	37						86.3
126 … 175	49						94.4	49						98.3
176 … 250	62						107.4	62						111.3
251 … 300	74						119.4	74						123.3
301 … 350	86						131.4	86						135.3
351 … 375	87						132.4	87						136.3
376 … 425	98						143.4	98						147.3
426 … 475	110						155.4	110						159.3
476 … 500	111						156.4	111						160.3

1) The dimension corresponds to the E value (piston rod extension) of the drive

Accessories

Ordering data – Bellows kit

An extended piston rod (order code E) is absolutely essential when using a bellows kit ➔ Ordering data – Modular product system.

The necessary dimension for order code E as a function of piston Ø and cylinder stroke as well as the corresponding bellows kit is indicated in the table below:

Order example:
Selected standards-based cylinder:
DSBC-32-320-PPV-A-...
The dimension for the corresponding E value (see table):
112 mm
Complete order reference for standards-based cylinder:
DSBC-32-320-PPV-A-...-112E
The corresponding bellows kit:
DADB-V6-32-S301-350

Cylinder data			Bellows kit	
Ø [mm]	Stroke [mm]	Dimension for E [mm]	Part no.	Type
32	10 ... 50	29	**553271**	**DADB-V6-32-S10-50**
	51 ... 125	47	**553273**	**DADB-V6-32-S51-125**
	126 ... 175	61	**553275**	**DADB-V6-32-S126-175**
	176 ... 250	80	**553277**	**DADB-V6-32-S176-250**
	251 ... 300	96	**553279**	**DADB-V6-32-S251-300**
	301 ... 350	112	**553281**	**DADB-V6-32-S301-350**
	351 ... 375	114	**553283**	**DADB-V6-32-S351-375**
	376 ... 425	130	**553285**	**DADB-V6-32-S376-425**
	426 ... 475	145	**553287**	**DADB-V6-32-S426-475**
	476 ... 500	147	**553289**	**DADB-V6-32-S476-500**
50	10 ... 50	28	**553311**	**DADB-V6-50-S10-50**
	51 ... 125	46	**553313**	**DADB-V6-50-S51-125**
	126 ... 175	56	**553315**	**DADB-V6-50-S126-175**
	176 ... 250	73	**553317**	**DADB-V6-50-S176-250**
	251 ... 300	86	**553319**	**DADB-V6-50-S251-300**
	301 ... 350	97	**553321**	**DADB-V6-50-S301-350**
	351 ... 375	105	**553323**	**DADB-V6-50-S351-375**
	376 ... 425	116	**553325**	**DADB-V6-50-S376-425**
	426 ... 475	126	**553327**	**DADB-V6-50-S426-475**
	476 ... 500	134	**553329**	**DADB-V6-50-S476-500**
80	10 ... 50	25	**553351**	**DADB-V6-80-S10-50**
	51 ... 125	37	**553353**	**DADB-V6-80-S51-125**
	126 ... 175	49	**553355**	**DADB-V6-80-S126-175**
	176 ... 250	62	**553357**	**DADB-V6-80-S176-250**
	251 ... 300	74	**553359**	**DADB-V6-80-S251-300**
	301 ... 350	86	**553361**	**DADB-V6-80-S301-350**
	351 ... 375	87	**553363**	**DADB-V6-80-S351-375**
	376 ... 425	98	**553365**	**DADB-V6-80-S376-425**
	426 ... 475	110	**553367**	**DADB-V6-80-S426-475**
	476 ... 500	111	**553369**	**DADB-V6-80-S476-500**

Cylinder data			Bellows kit	
Ø [mm]	Stroke [mm]	Dimension for E [mm]	Part no.	Type
40	10 ... 50	28	**553291**	**DADB-V6-40-S10-50**
	51 ... 125	43	**553293**	**DADB-V6-40-S51-125**
	126 ... 175	56	**553295**	**DADB-V6-40-S126-175**
	176 ... 250	72	**553297**	**DADB-V6-40-S176-250**
	251 ... 300	86	**553399**	**DADB-V6-40-S251-300**
	301 ... 350	100	**553301**	**DADB-V6-40-S301-350**
	351 ... 375	101	**553303**	**DADB-V6-40-S351-375**
	376 ... 425	115	**553305**	**DADB-V6-40-S376-425**
	426 ... 475	130	**553307**	**DADB-V6-40-S426-475**
	476 ... 500	131	**553309**	**DADB-V6-40-S476-500**
63	10 ... 50	28	**553331**	**DADB-V6-63-S10-50**
	51 ... 125	46	**553333**	**DADB-V6-63-S51-125**
	126 ... 175	56	**553335**	**DADB-V6-63-S126-175**
	176 ... 250	73	**553337**	**DADB-V6-63-S176-250**
	251 ... 300	86	**553339**	**DADB-V6-63-S251-300**
	301 ... 350	97	**553341**	**DADB-V6-63-S301-350**
	351 ... 375	105	**553343**	**DADB-V6-63-S351-375**
	376 ... 425	116	**553345**	**DADB-V6-63-S376-425**
	426 ... 475	126	**553347**	**DADB-V6-63-S426-475**
	476 ... 500	134	**553349**	**DADB-V6-63-S476-500**
100	10 ... 50	25	**553371**	**DADB-V6-100-S10-50**
	51 ... 125	37	**553373**	**DADB-V6-100-S51-125**
	126 ... 175	49	**553375**	**DADB-V6-100-S126-175**
	176 ... 250	62	**553377**	**DADB-V6-100-S176-250**
	251 ... 300	74	**553379**	**DADB-V6-100-S251-300**
	301 ... 350	86	**553381**	**DADB-V6-100-S301-350**
	351 ... 375	87	**553383**	**DADB-V6-100-S351-375**
	376 ... 425	98	**553385**	**DADB-V6-100-S376-425**
	426 ... 475	110	**553387**	**DADB-V6-100-S426-475**
	476 ... 500	111	**553389**	**DADB-V6-100-S476-500**

Accessories

Multi-position kit DPNC

Material:
Flange: Wrought aluminium alloy
Threaded pins, hex nuts: Galvanised steel

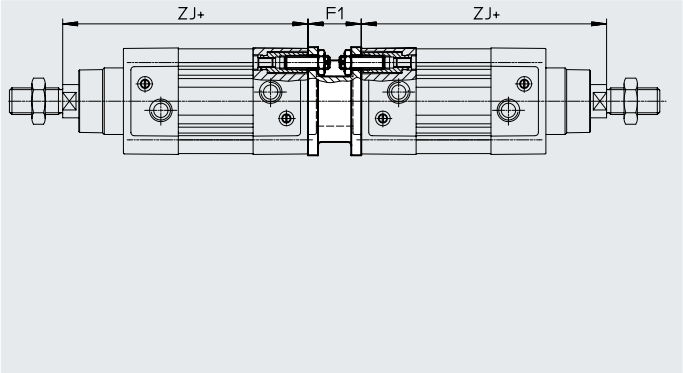

Note

The maximum total stroke length must not be exceeded when combining cylinders and multi-position kits.

Dimensions and ordering data

For ø [mm]	F1	ZJ DSBC-... +1.8	ZJ DSBC-...-C	Max. Total stroke [mm]	Weight [g]	Part no.	Type1)
32	27	119.1	164.1	500	249	**174418**	**DPNC-32**
40	27	133.9	186.9	800	343	**174419**	**DPNC-40**
50	32	141.8	208.8	800	332	**174420**	**DPNC-50**
63	28	157.1	233.1	700	387	**174421**	**DPNC-63**
80	38	173.6	268.6	1000	840	**174422**	**DPNC-80**
100	38	187.5	285.7	900	1194	**174423**	**DPNC-100**
125	48	225	349.3	1000	2090	**174424**	**DPNC-125**

1) Suitable for ATEX

Connecting two cylinders with identical piston diameters to form a 3- or 4-position cylinder

A 3- or 4-position cylinder consists of two separate cylinders whose piston rods advance in opposite directions.

This means that, depending on the actuation and stroke pattern, this type of cylinder can assume up to four positions. In each case the cylinder is moved precisely against a stop. Note that when one end of the piston rod is fixed, the cylinder barrel executes the movement. The connections to the cylinder must therefore be flexible.

To achieve 3 positions

Two cylinders with the same stroke length must be connected to each other.

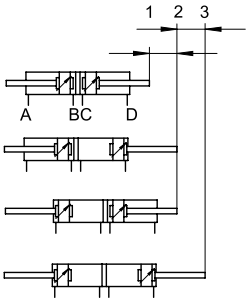

To achieve 4 positions

Two cylinders with different stroke lengths must be connected to each other.

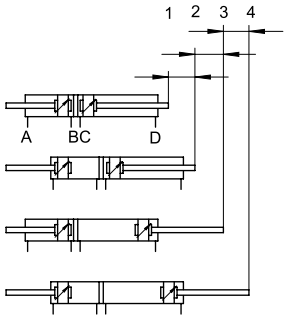

Accessories

Mounting kit DAVM

For lateral valve mounting, directly on the drive

Material:
Mounting bracket, screws: Galvanised steel
Slot nut: High-alloy stainless steel

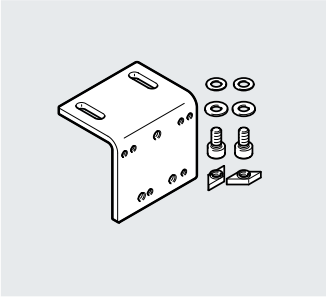

Example

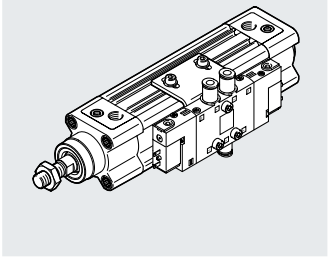

The hole pattern on the angle bracket enables solenoid valves to be attached according to the allocation on the right. The following table shows a few solenoid valves that are available.

Allocation table, mounting kit for solenoid valves

Mounting kit	Solenoid valve		
DAVM-MW-V1-32-V	CPE14	VUVG-L14	VUVS-L20
DAVM-MW-V1-50-V	CPE18, CPE24	VUVG-L18	VUVS-L25, VUVS-L30

Recommended solenoid valves CPE

Datasheets ➔ Internet: cpe

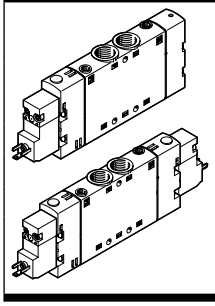

	For ⌀ [mm]	Mounting screw	Pneumatic port	Function	Part no.	Type
	Single solenoid					
	32, 40	M4x20	G1/8	5/2-way valve	**196941**	**CPE14-M1BH-5L-1/8**
	50, 63	M4x25	G1/4		**163142**	**CPE18-M1H-5L-1/4**
	80, 100, 125	M5x30	G3/8		**163166**	**CPE24-M1H-5L-3/8**
	Double solenoid					
	32, 40	M4x20	G1/8	5/2-way valve	**196939**	**CPE14-M1BH-5J-1/8**
	50, 63	M4x25	G1/4		**163143**	**CPE18-M1H-5J-1/4**
	80, 100, 125	M5x30	G3/8		**163167**	**CPE24-M1H-5J-3/8**

Accessories for solenoid valves CPE

	For valve	Cable length [m]	Part no.	Type
Connecting cable NEBV/KMEB			Datasheets ➔ Internet: nebv	
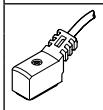	CPE14	2.5	**8047679**	**NEBV-Z4WA2L-R-E-2.5-N-LE2-S1**
		5	**8047680**	**NEBV-Z4WA2L-R-E-5-N-LE2-S1**
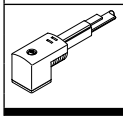	CPE18	2.5	**151688**	**KMEB-1-24-2.5-LED**
	CPE24	5	**151689**	**KMEB-1-24-5-LED**
		10	**193457**	**KMEB-1-24-10-LED**

Accessories

Recommended solenoid valves VUVG

Datasheets ➔ Internet: vuvg

	For ⌀ [mm]	Mounting screw	Pneumatic port	Function	Part no.	Type
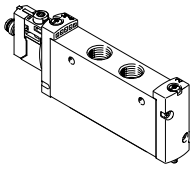	**Single solenoid**					
	32, 40	M3x20	G1/8	5/2-way valve	**8031508**	**VUVG-L14-M52-MT-G18-1R8L**
	50, 63	M4x25	G1/4		**8031532**	**VUVG-L18-M52-MT-G14-1R8L**
	Double solenoid					
	32, 40	M3x20	G1/8	5/2-way valve	**574230**	**VUVG-L14-B52-T-G18-1R8L**
	50, 63	M4x25	G1/4		**8031533**	**VUVG-L18-B52-T-G14-1R8L**

Connecting cables NEBU, straight – for solenoid valves VUVG

	Electrical connection 1, connection technology	Electrical connection 2, connection technology	Electrical connection 2, number of pins/cores	Cable length	Part no.	Type
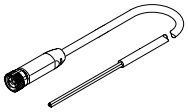	M8x1 A-coded to EN 61076-2-104	Open end	3	2.5 m	**8078223**	**NEBA-M8G3-U-2.5-N-LE3**
				5 m	**8078224**	**NEBA-M8G3-U-5-N-LE3**

Connecting cables NEBU, angled – for solenoid valves VUVG

	Electrical connection 1, connection technology	Electrical connection 2, connection technology	Electrical connection 2, number of pins/cores	Cable length	Part no.	Type
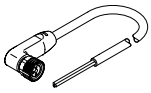	M8x1 A-coded to EN 61076-2-104	Open end	3	2.5 m	**8078230**	**NEBA-M8W3-U-2.5-N-LE3**
				5 m	**8078231**	**NEBA-M8W3-U-5-N-LE3**

Recommended solenoid valves VUVS

Datasheets ➔ Internet: vuvs

	For ⌀ [mm]	Mounting screw	Pneumatic port	Function	Part no.	Type
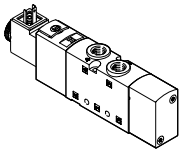	**Single solenoid, type C**					
	32, 40	M3x20	G1/8	5/2-way valve	**575263**	**VUVS-L20-M52-AD-G18-F7-1C1**
					575264	**VUVS-L20-M52-MD-G18-F7-1C1**
	50, 63	M4x20	G1/4		**575503**	**VUVS-L25-M52-AD-G14-F8-1C1**
					575511	**VUVS-L25-M52-MD-G14-F8-1C1**
	80, 100, 125	M5x30	G3/8		**575596**	**VUVS-L30-M52-AD-G38-F8-1C1**
					575604	**VUVS-L30-M52-MD-G38-F8-1C1**
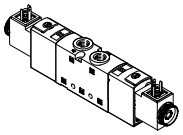	Double solenoid, type C					
	32, 40	M3x20	G1/8	5/2-way valve	**575265**	**VUVS-L20-B52-D-G18-F7-1C1**
	50, 63	M4x20	G1/4		**575518**	**VUVS-L25-B52-D-G14-F8-1C1**
	80, 100, 125	M5x30	G3/8		**575611**	**VUVS-L30-B52-D-G38-F8-1C1**

Accessories for solenoid valves VUVS

	Description				Part no.	Type
Plug socket MSSD						
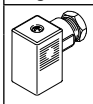	**Plug pattern type C, to EN 175301-803**					
	3-pin, screw terminal	Cable fitting Pg7	0 ... 250 V AC/DC	IP65	**151687**	**MSSDEB**

Note

Dimensions and ordering data
➔ Page 1

Accessories

Dimensions and ordering data Download CAD data ➔ www.festo.com

DAVM-MW-V1-32-V

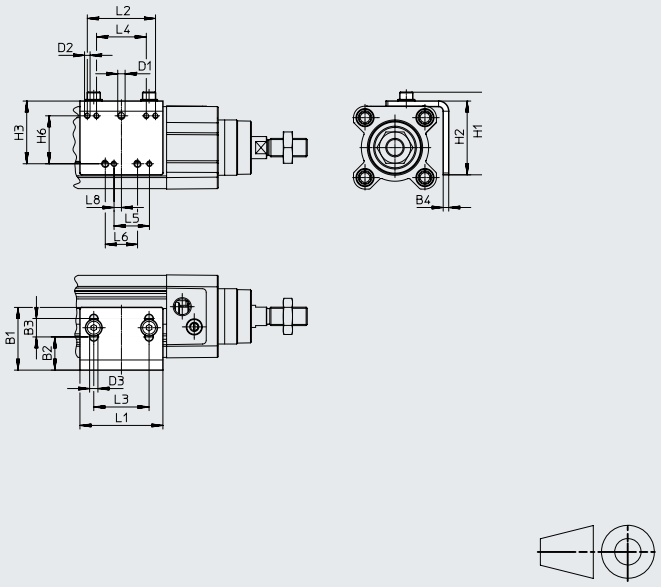

DAVM-MW-V1-50-V

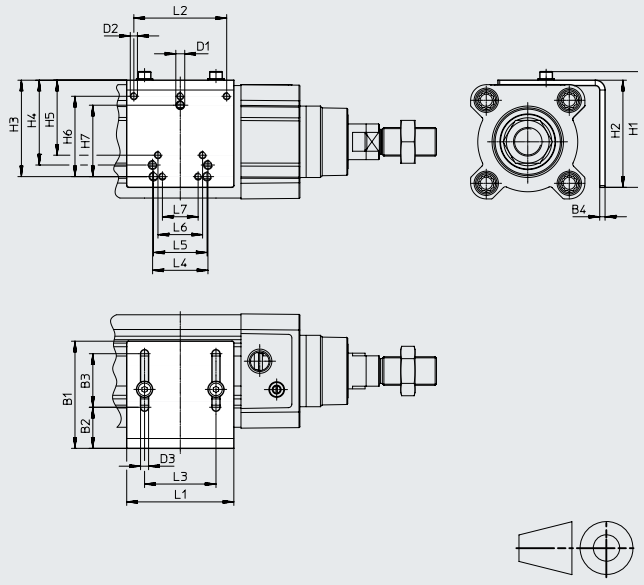

Note

Mounting is only possible on the side on which the pneumatic connections are located.

Two slot nuts are included in the scope of delivery of the mounting kit. Additional slot nuts ➔ page 62

For Ø [mm]	B1	B2	B3	B4	D1	D2	D3 Ø	H1	H2	H3	H4	H5	H6	H7
32	34	18	10	3	M4	M3	4.5	44.8	40	34	–	–	26	–
40														
50	60	23	30	3	M5	M4	4.5	64.8	60	54	47.5	42	45	40
63														
80														
100														
125														

For Ø [mm]	L1	L2	L3	L4	L5	L6	L7	L8	CRC[1]	Weight [g]	Part no.	Type
32	45	37	30	27	19.2	17.5	–	4	1	76	**2568514**	**DAVM-MW-V1-32-V**
40												
50	60	52	40	31	30	25	20	–	1	160	**2612128**	**DAVM-MW-V1-50-V**
63												
80												
100												
125												

1) More information www.festo.com/x/topic/crc

Accessories

Ordering data – Guide units for fixed strokes (recirculating ball bearing guide only)

Datasheets → Internet: feng

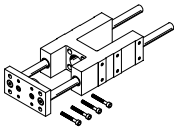

Stroke [mm]	Part no.	Type1)	Stroke [mm]	Part no.	Type1)
For Ø 32 mm			**For Ø 40 mm**		
10 … 50	**34493**	**FENG-32-50-KF**	10 … 50	**34499**	**FENG-40-50-KF**
10 … 100	**34494**	**FENG-32-100-KF**	10 … 100	**34500**	**FENG-40-100-KF**
10 … 160	**34495**	**FENG-32-160-KF**	10 … 160	**34501**	**FENG-40-160-KF**
10 … 200	**34496**	**FENG-32-200-KF**	10 … 200	**34502**	**FENG-40-200-KF**
10 … 250	**150289**	**FENG-32-250-KF**	10 … 250	**34503**	**FENG-40-250-KF**
10 … 320	**34497**	**FENG-32-320-KF**	10 … 320	**34504**	**FENG-40-320-KF**
10 … 400	**150290**	**FENG-32-400-KF**	10 … 400	**150291**	**FENG-40-400-KF**
10 … 500	**34498**	**FENG-32-500-KF**	10 … 500	**34505**	**FENG-40-500-KF**
For Ø 50 mm			**For Ø 63 mm**		
10 … 50	**34506**	**FENG-50-50-KF**	10 … 50	**34513**	**FENG-63-50-KF**
10 … 100	**34507**	**FENG-50-100-KF**	10 … 100	**34514**	**FENG-63-100-KF**
10 … 160	**34508**	**FENG-50-160-KF**	10 … 160	**34515**	**FENG-63-160-KF**
10 … 200	**34509**	**FENG-50-200-KF**	10 … 200	**34516**	**FENG-63-200-KF**
10 … 250	**34510**	**FENG-50-250-KF**	10 … 250	**34517**	**FENG-63-250-KF**
10 … 320	**34511**	**FENG-50-320-KF**	10 … 320	**34518**	**FENG-63-320-KF**
10 … 400	**150292**	**FENG-50-400-KF**	10 … 400	**34519**	**FENG-63-400-KF**
10 … 500	**34512**	**FENG-50-500-KF**	10 … 500	**34520**	**FENG-63-500-KF**
For Ø 80 mm			**For Ø 100 mm**		
10 … 50	**34521**	**FENG-80-50-KF**	10 … 50	**34529**	**FENG-100-50-KF**
10 … 100	**34522**	**FENG-80-100-KF**	10 … 100	**34530**	**FENG-100-100-KF**
10 … 160	**34523**	**FENG-80-160-KF**	10 … 160	**34531**	**FENG-100-160-KF**
10 … 200	**34524**	**FENG-80-200-KF**	10 … 200	**34532**	**FENG-100-200-KF**
10 … 250	**34525**	**FENG-80-250-KF**	10 … 250	**34533**	**FENG-100-250-KF**
10 … 320	**34526**	**FENG-80-320-KF**	10 … 320	**34534**	**FENG-100-320-KF**
10 … 400	**34527**	**FENG-80-400-KF**	10 … 400	**34535**	**FENG-100-400-KF**
10 … 500	**34528**	**FENG-80-500-KF**	10 … 500	**34536**	**FENG-100-500-KF**

Ordering data – Guide units for variable strokes

Datasheets → Internet: feng

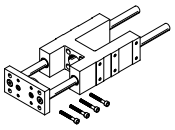

For ⌀ [mm]	Stroke [mm]	With recirculating ball bearing guide		With plain-bearing guide	
		Part no.	Type1)	Part no.	Type1)
32	10 … 500	**34487**	**FENG-32-…-KF**	**34481**	**FENG-32-…-GF**
40	10 … 500	**34488**	**FENG-40-…-KF**	**34482**	**FENG-40-…-GF**
50	10 … 500	**34489**	**FENG-50-…-KF**	**34483**	**FENG-50-…-GF**
63	10 … 500	**34490**	**FENG-63-…-KF**	**34484**	**FENG-63-…-GF**
80	10 … 500	**34491**	**FENG-80-…-KF**	**34485**	**FENG-80-…-GF**
100	10 … 500	**34492**	**FENG-100-…-KF**	**34486**	**FENG-100-…-GF**

1) Suitable for ATEX

Accessories

Ordering data – Proximity switch for T-slot, magneto-resistive

Datasheets → Internet: smt

	Type of mounting	Switching output	Electrical connection	Cable length [m]	Part no.	Type
N/O						
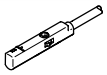	Inserted in the slot from above, flush with the cylinder profile, short design	PNP	Cable, 3-core	2.5	**574335**	**SMT-8M-A-PS-24V-E-2.5-OE**
			Plug M8x1, 3-pin	0.3	**574334**	**SMT-8M-A-PS-24V-E-0.3-M8D**
			Plug M12x1, 3-pin	0.3	**574337**	**SMT-8M-A-PS-24V-E-0.3-M12**
		NPN	Cable, 3-core	2.5	**574338**	**SMT-8M-A-NS-24V-E-2.5-OE**
			Plug M8x1, 3-pin	0.3	**574339**	**SMT-8M-A-NS-24V-E-0.3-M8D**
N/C						
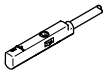	Inserted in the slot from above, flush with the cylinder profile, short design	PNP	Cable, 3-core	7.5	**574340**	**SMT-8M-A-PO-24V-E-7.5-OE**

Ordering data – Proximity switch for T-slot, magnetic reed

Datasheets → Internet: sme

	Type of mounting	Switching output	Electrical connection	Cable length [m]	Part no.	Type
N/O						
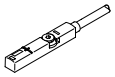	Inserted in the slot from above, flush with the cylinder profile	Contacting	Cable, 3-core	2.5	**543862**	**SME-8M-DS-24V-K-2.5-OE**
				5.0	**543863**	**SME-8M-DS-24V-K-5.0-OE**
			Cable, 2-core	2.5	**543872**	**SME-8M-ZS-24V-K-2.5-OE**
			Plug M8x1, 3-pin	0.3	**543861**	**SME-8M-DS-24V-K-0.3-M8D**
N/C						
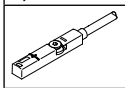	Inserted in the slot from above, flush with the cylinder profile	Contacting	Cable, 3-core	7.5	**546799**	**SME-8M-DO-24V-K-7.5-OE**

Ordering data – Proximity switch for T-slot, NAMUR

Datasheets → Internet: sdbt

	Type of mounting	Switching output	Electrical connection	Cable length [m]	Part no.	Type
N/O						
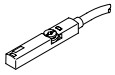	Inserted in the slot from above, flush with cylinder profile	NAMUR	Cable, 2-core	5	**579071**	**SDBT-MS-20NL-ZN-E-5-LE-EX6**
				10	**579072**	**SDBT-MS-20NL-ZN-E-10-LE-EX6**

Accessories

Ordering data – Safety clip for ATEX zone

	Description	For size	Part no.	Type
	• Protects "equipment that is not intrinsically safe" against simple disconnection, here the plug of the proximity switch SMT and connecting cable NEBA • ATEX category: gas: II 3G / dust: II 3D	Plug M8x1	**548067**	**NEAU-M8-GD**

Connecting cables NEBA, straight, M8 connection

	Electrical connection 1, connection technology	Electrical connection 2, connection technology	Electrical connection 2, number of pins/cores	Cable length	Part no.	Type
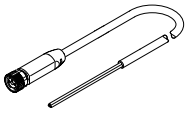	M8x1 A-coded to EN 61076-2-104	Open end	3	2.5 m	**8078223**	**NEBA-M8G3-U-2.5-N-LE3**
				5 m	**8078224**	**NEBA-M8G3-U-5-N-LE3**

Connecting cables NEBA, straight, M12 connection

	Electrical connection 1, connection technology	Electrical connection 2, connection technology	Electrical connection 2, number of pins/cores	Cable length	Part no.	Type
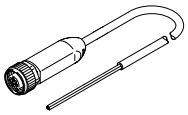	M12x1, A-coded to EN 61076-2-101	Open end	3	2.5 m	**8078236**	**NEBA-M12G5-U-2.5-N-LE3**
				5 m	**8078237**	**NEBA-M12G5-U-5-N-LE3**

Connecting cables NEBA, angled, M8 connection

	Electrical connection 1, connection technology	Electrical connection 2, connection technology	Electrical connection 2, number of pins/cores	Cable length	Part no.	Type
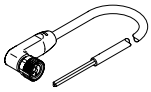	M8x1 A-coded to EN 61076-2-104	Open end	3	2.5 m	**8078230**	**NEBA-M8W3-U-2.5-N-LE3**
				5 m	**8078231**	**NEBA-M8W3-U-5-N-LE3**

Connecting cables NEBA, angled, M12 connection

	Electrical connection 1, connection technology	Electrical connection 2, connection technology	Electrical connection 2, number of pins/cores	Cable length	Part no.	Type
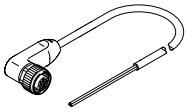	M12x1, A-coded to EN 61076-2-101	Open end	3	2.5 m	**8078245**	**NEBA-M12W5-U-2.5-N-LE3**
				5 m	**8078246**	**NEBA-M12W5-U-5-N-LE3**

Accessories

Position transmitter

The position transmitter continuously senses the position of the piston.

It has an analogue output with an output signal that is proportional to the piston position.

Ordering data – Position transmitter for T-slot

Datasheets → Internet: position transmitter

	For Ø	Position measuring range	Analogue output [V]	Analogue output [mA]	Type of mounting	Electrical connection	Cable length [m]	Part no.	Type
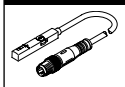	32 … 125	0 … 40	0 … 10	–	Inserted in the slot from above	Plug M8x1, 4-pin, lengthways	0.3	**553744**	**SMAT-8M-U-E-0.3-M8D**
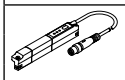	32 … 125	0 … 50	–	4 … 20	Inserted in the slot from above	Plug M8x1, 4-pin, lengthways	0.3	**1531265**	**SDAT-MHS-M50-1L-SA-E-0.3-M8**
		0 … 80						**1531266**	**SDAT-MHS-M80-1L-SA-E-0.3-M8**
		0 … 100						**1531267**	**SDAT-MHS-M100-1L-SA-E-0.3-M8**
		0 … 125						**1531268**	**SDAT-MHS-M125-1L-SA-E-0.3-M8**
		0 … 160						**1531269**	**SDAT-MHS-M160-1L-SA-E-0.3-M8**
		0 … 50	0 … 10	–				**8115394**	**SDAT-MHS-M50-1L-SV-E-0.3-M8**

Connecting cables NEBA, straight

	Electrical connection 1, connection technology	Electrical connection 2, connection technology	Electrical connection 2, number of pins/cores	Cable length	Part no.	Type
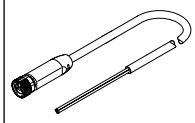	M8x1 A-coded to EN 61076-2-104	Open end	4	2.5 m	**8078227**	**NEBA-M8G4-U-2.5-N-LE4**
				5 m	**8078228**	**NEBA-M8G4-U-5-N-LE4**

Connecting cables NEBA, angled

	Electrical connection 1, connection technology	Electrical connection 2, connection technology	Electrical connection 2, number of pins/cores	Cable length	Part no.	Type
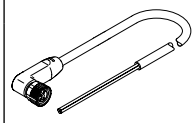	M8x1 A-coded to EN 61076-2-104	Open end	4	2.5 m	**8078233**	**NEBA-M8W4-U-2.5-N-LE4**
				5 m	**8078234**	**NEBA-M8W4-U-5-N-LE4**

Accessories

Datasheets → Internet: grla

Ordering data – One-way flow control valves

	Connection		Material	Part no.	Type
	Thread	For tubing O.D.			
For exhaust air					
	G1/8	4	Metal design	**193143**	**GRLA-1/8-QS-4-D**
		6		**193144**	**GRLA-1/8-QS-6-D**
		8		**193145**	**GRLA-1/8-QS-8-D**
	G1/4	6		**193146**	**GRLA-1/4-QS-6-D**
		8		**193147**	**GRLA-1/4-QS-8-D**
		10		**193148**	**GRLA-1/4QS-10-D**
	G3/8	6		**193149**	**GRLA-3/8-QS-6-D**
		8		**193150**	**GRLA-3/8-QS-8-D**
		10		**193151**	**GRLA-3/8-QS-10-D**
	G1/2	12		**193152**	**GRLA-1/2-QS-12-D**

Ordering data

	Description	Part no.	Type	PU[1]
Slot cover for T-slot				
	Insertable, length 0.5 m	**151680**	**ABP-5-S**	2
Slot nut for T-slot				
	Inserted in the slot from above, thread M4	**8028500**	**ABAN-8-1M4-5-P2**	2
		8028501	**ABAN-8-1M4-5-P100**	100

1) Packaging unit